Washer-Extractor

Refer to Page 5 for Model Numbers

Parts

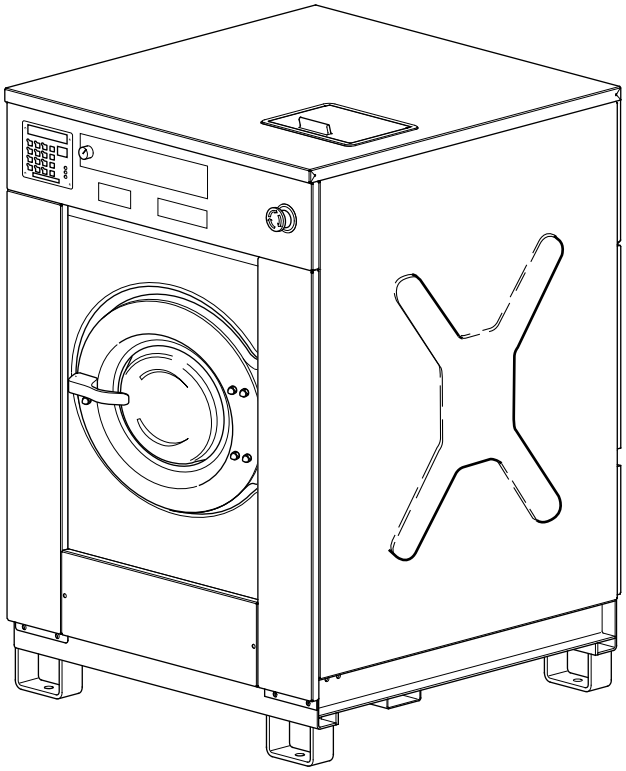

CFD12C_D0237

Alliance Laundry Systems

www.alliancelaundry.com

Part No. D0237R10
January 2014

Table of Contents

Title	Page
Parts Ordering Information	3
Nameplate Location	3
Model Identification	5
Frame - *50, *55, *176 and *234 Models	6
Frame - *75 and *304 Models	8
Shock and Spring Assembly - *50 and *176 Models; *55 and *234 Models Through 6/20/11	10
Shock and Spring Assembly - *55 and *234 Models Starting 6/21/11	12
Shock and Spring Assembly - *75 and *304 Models Through 11/13/11	14
Shock and Spring Assembly - *75 and *304 Models Starting 11/14/11	16
Tub and Drum - *50, *55, *176 and *234 Models (Drawing 1 of 3)	18
Tub and Drum - *50, *55, *176 and *234 Models (Drawing 2 of 3)	20
Tub and Drum - *50, *55, *176 and *234 Models (Drawing 3 of 3)	22
Tub and Drum - *75 and *304 Models	24
Bearing Assembly - *50, *55, *176 and *234 Models Through 1/30/11	26
Bearing Assembly - *50, *55, *176 and *234 Models Starting 1/31/11	28
Bearing Assembly - *75 and *304 Models	30
Drum, Pulley and Belt - *50, *55, *176 and *234 Models	32
Drum, Pulley and Belt - *75 and *304 Models (Drawing 1 of 2)	34
Drum, Pulley and Belt - *75 and *304 Models (Drawing 2 of 2)	36
Motor - *50, *55, *176 and *234 Models	38
Motor - *75 and *304 Models	40
Drain Assembly - *50, *55, *176 and *234 Models	42
Single Drain Assembly - *75 and *304 Models	44
Dual Drain Assembly - *75 and *304 Models	46
Door Lock	48
Door	50
Control Panel - Cygnus Professional OPL Models	52
Control Panel - Cygnus Premium OPL Models	54
Control Panel - Cygnus Premium Coin Models	56
Control Panel - Cygnus Standard/Commercial OPL Models	58
Control Panel - Cygnus Standard/Commercial Coin Models	60
Control Panel - Micro-20	62
Control Panel - Sigma	64
Control Panel - PS40F	66
Control Panel - PC30	68
Coin Meter - Coin Models	70
Coin Drop - Electronic Coin Meter	72
Front, Left Side and Upper Back Panels - *50, *55, *176 and *234 Models	74
Front and Left Side Panels - *75 and *304 Models Through 9/30/08	76
Front and Left Side Panels - *75 and *304 Models Starting 10/1/08 Through 11/13/11	78
Front and Left Side Panels - *75 and *304 Models Starting 11/14/11	80

© Copyright 2014, Alliance Laundry Systems LLC

All rights reserved. No part of the contents of this book may be reproduced or transmitted in any form or by any means without the expressed written consent of the publisher.

Top, Right Side and Lower Back Panels - *50, *55, *176 and *234 Models 82
Top, Right Side and Lower Back Panels - *75 and *304 Models 84
Upper Back Panel - *50, *55, *176 and *234 Models (Drawing 1 of 3) 86
Upper Back Panel - *50, *55, *176 and *234 Models (Drawing 2 of 3) 88
Upper Back Panel - *50, *55, *176 and *234 Models (Drawing 3 of 3) 90
Upper Back Panel - *75 and *304 Models (Drawing 1 of 3) 92
Upper Back Panel - *75 and *304 Models (Drawing 2 of 3) 94
Upper Back Panel - *75 and *304 Models (Drawing 3 of 3) 96
Electrical Connection Assembly 98
Electrical Connection Assembly - *50, *55, *176 and *234 Models 100
Control Module - *50, *55, *176 and *234 Models 102
Control Module - *75 and *304 Models 104
Balance Switch 106
Supply Dispenser (Drawing 1 of 5) 108
Supply Dispenser (Drawing 2 of 5) 110
Supply Dispenser (Drawing 3 of 5) 112
Supply Dispenser (Drawing 4 of 5) 114
Supply Dispenser (Drawing 5 of 5) 116
Steam and Electric Heating Options 118
Soap Pump 120
Spray Pump 122
Parts Index 125

© Copyright, Alliance Laundry Systems LLC – DO NOT COPY or TRANSMIT

Parts Ordering Information

If literature or replacement parts are required, contact the source from whom the machine was purchased or contact Alliance Laundry Systems at (920) 748-3950 for the name and address of the nearest authorized parts distributor.

For technical assistance, call either of the numbers listed below:

(920) 748-3121 Ripon, Wisconsin

+32 56 41 20 54 Wevelgem, Belgium

Nameplate Location

When calling or writing about your product, be sure to mention model and serial numbers. Model and serial numbers are located on nameplate(s) as shown.

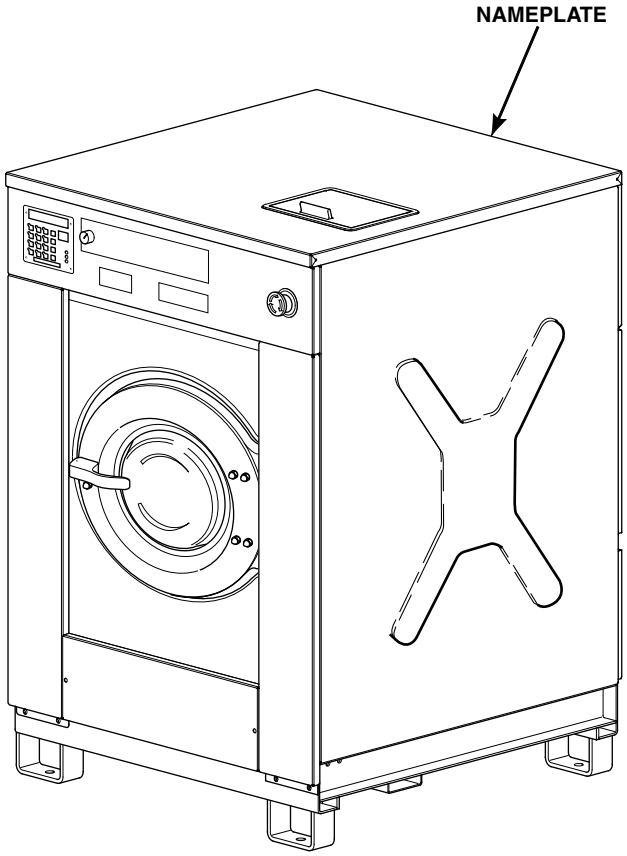

CFD12CA_D0237

© Copyright, Alliance Laundry Systems LLC – DO NOT COPY or TRANSMIT

Notes

© Copyright, Alliance Laundry Systems LLC – DO NOT COPY or TRANSMIT

Model Identification

Information in this manual is applicable to these washer-extractor models:

CHF055ANH
CHF055MNH
CHF075ANH
CHF075MNH
CHF234ANH
CHF234MNH
CHF304ANH
CHF304MNH
CSHW50P
CSHW75P
HF176_CAM-TIMER
HF176_MICRO-20_COIN
HF176_MICRO-20_OPL
HF176_PC30
HF176_PS40
HF176_PS40F
HF176_SIGMA_COIN
HF176_SIGMA_OPL

HF234_CAM-TIMER
HF234_CYGNUS-COMM_COIN
HF234_CYGNUS-COMM_OPL
HF234_CYGNUS-PREM_COIN
HF234_CYGNUS-PREM_OPL
HF234_CYGNUS-PRO
HF234_CYGNUS-STANDARD_COIN
HF234_CYGNUS-STANDARD_OPL
HF234_MICRO-20_COIN
HF234_MICRO-20_OPL
HF234_PC30
HF234_PS40
HF234_PS40F
HF234_SIGMA_COIN
HF234_SIGMA_OPL
HF304_CAM-TIMER
HF304_CYGNUS-COMM_COIN
HF304_CYGNUS-COMM_OPL
HF304_CYGNUS-PREM_COIN
HF304_CYGNUS-PREM_OPL
HF304_CYGNUS-PRO
HF304_CYGNUS-STANDARD_COIN
HF304_CYGNUS-STANDARD_OPL
HF304_MICRO-20_COIN
HF304_MICRO-20_OPL
HF304_PC30
HF304_PS40
HF304_PS40F
HF304_SIGMA_COIN
HF304_SIGMA_OPL

IHF055ANH
IHF055MNH
IHF075ANH
IHF075MNH
IHF234ANH
IHF234MNH
IHF234ZNH
IHF304ANH
IHF304MNH
IHF304ZNH

© Copyright, Alliance Laundry Systems LLC – DO NOT COPY or TRANSMIT

Frame - *50, *55, *176 and *234 Models

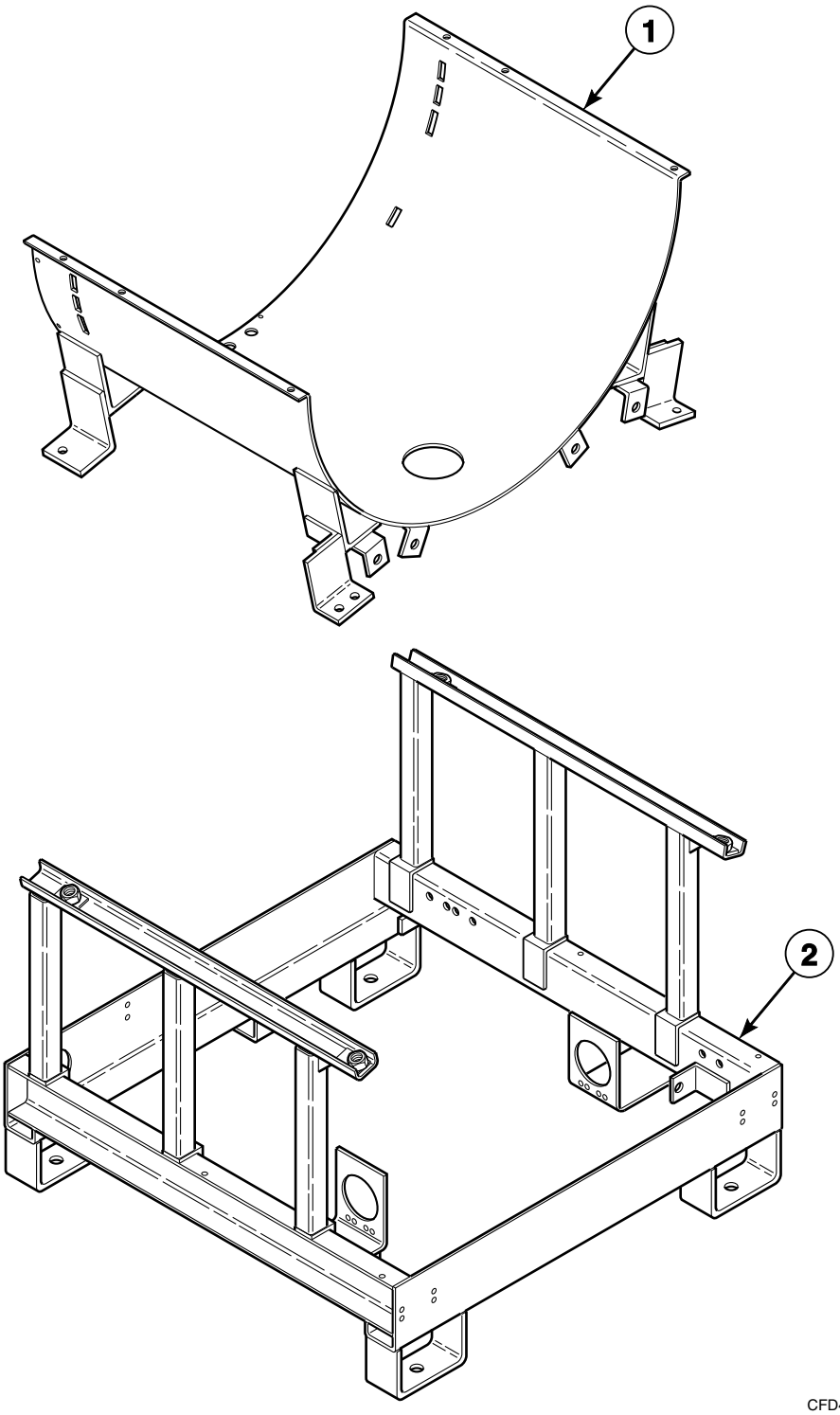

© Copyright, Alliance Laundry Systems LLC – DO NOT COPY or TRANSMIT

Frame - *50, *55, *176 and *234 Models

REF	PART NO.	DESCRIPTION	COMMENTS
1	115/00144/00	Tub Support	
2	114/00019/50	Frame	

© Copyright, Alliance Laundry Systems LLC – DO NOT COPY or TRANSMIT

Frame - *75 and *304 Models

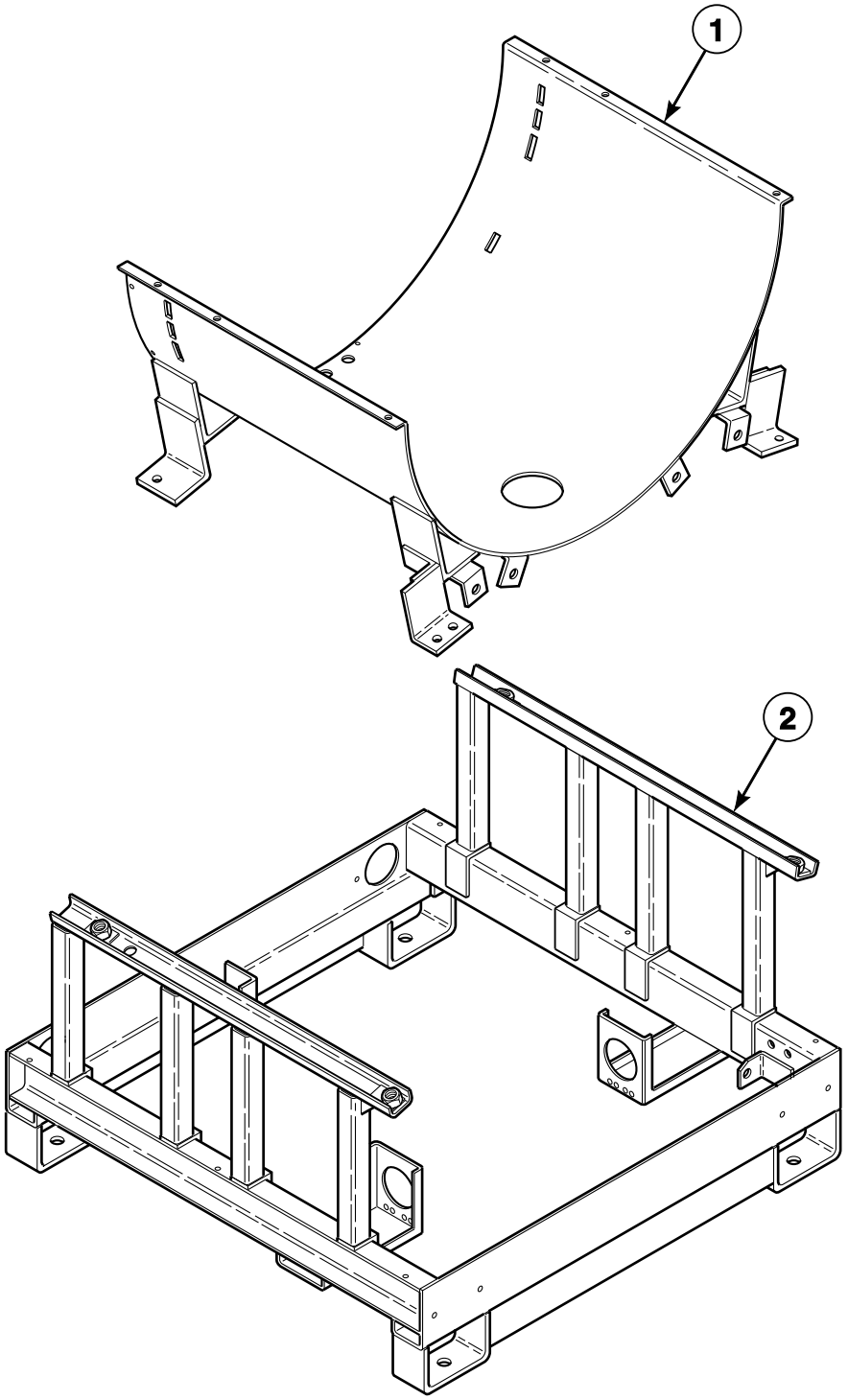

CFD44P_D0237

© Copyright, Alliance Laundry Systems LLC – DO NOT COPY or TRANSMIT

Frame - *75 and *304 Models

REF	PART NO.	DESCRIPTION	COMMENTS
1	115/00118/00	Tub Support	
2	114/00018/50	Frame	

© Copyright, Alliance Laundry Systems LLC – DO NOT COPY or TRANSMIT

Shock and Spring Assembly - *50 and *176 Models; *55 and *234 Models Through 6/20/11

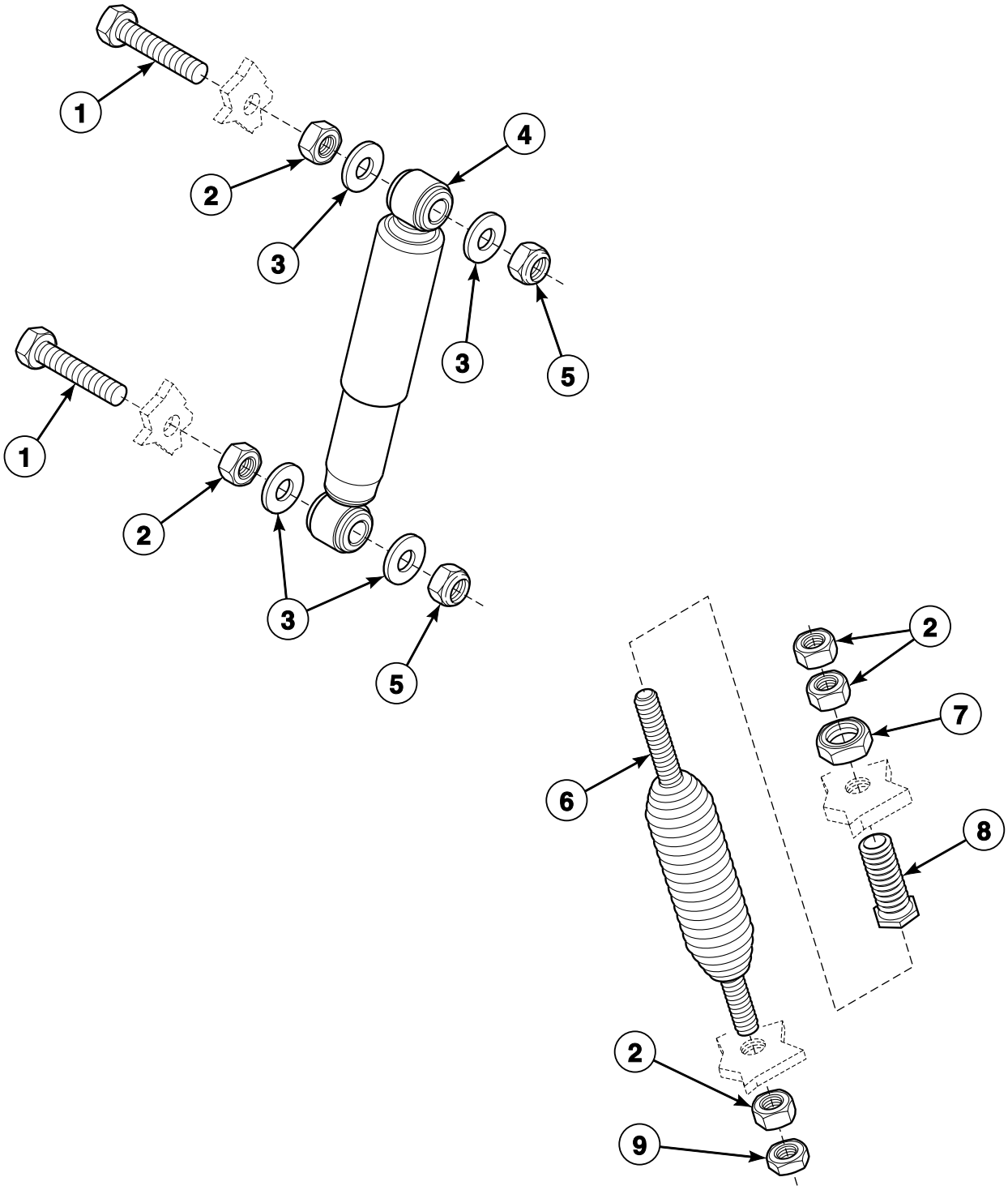

CFD26P_D0237

© Copyright, Alliance Laundry Systems LLC – DO NOT COPY or TRANSMIT

Shock and Spring Assembly - *50 and *176 Models; *55 and *234 Models Through 6/20/11

REF	PART NO.	DESCRIPTION	COMMENTS
	B12419101	Shock Absorber Service Kit	Used to convert to the dual shock absorber configuration
1	206/00153/00	Bolt	
2	204/00012/00	Nut	
3	201/00023/00	Washer	
4	247/00008/00	Shock Absorber	
5	204/00113/00	Nut	
6	B12456301	Suspension Spring	
7	204/00016/00	Nut	
8	224/00046/00	Bolt	
9	204/00019/00	Nut	

© Copyright, Alliance Laundry Systems LLC – DO NOT COPY or TRANSMIT

Shock and Spring Assembly - *55 and *234 Models Starting 6/21/11

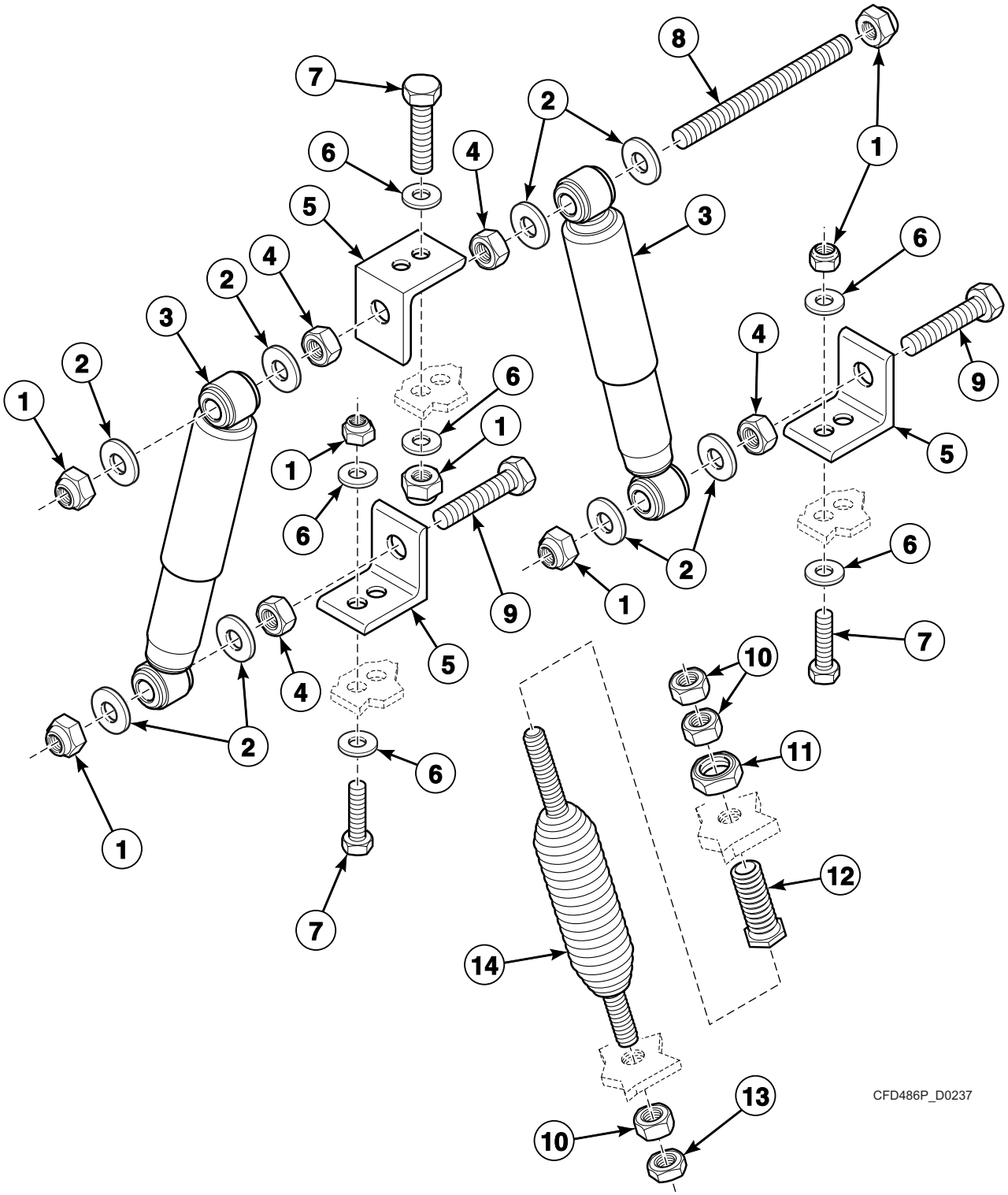

© Copyright, Alliance Laundry Systems LLC – DO NOT COPY or TRANSMIT

Shock and Spring Assembly - *55 and *234 Models Starting 6/21/11

REF	PART NO.	DESCRIPTION	COMMENTS
	B12419101	Shock Absorber Service Kit	Includes items 1-3, 5, 6 and 8-10, 206/00119/00 Bolt, 204/00110/00 Nut, 111/10101/00 Dispenser Front Mounting Plate, 111/10102/00 Dispenser Rear Mounting Plate, 206/00027/00 Bolt, 202/00004/00 Washer, 204/00114/00 Nut, B12419501 Small Caliber and B12419401 Large Caliber
1	204/00113/00	Nut	
2	201/00001/00	Washer	
3	247/00008/00	Shock Absorber	
4	204/00012/00	Nut	
5	B12418401	Support	
6	201/00010/00	Washer	
7	206/00087/00	Bolt	
8	B12511601	Threaded Rod	
9	206/00153/00	Bolt	
10	204/00012/00	Nut	
11	204/00016/00	Nut	
12	224/00046/00	Bolt	
13	204/00019/00	Nut	
14	B12456301	Suspension Spring	

© Copyright, Alliance Laundry Systems LLC – DO NOT COPY or TRANSMIT

Shock and Spring Assembly - *75 and *304 Models Through 11/13/11

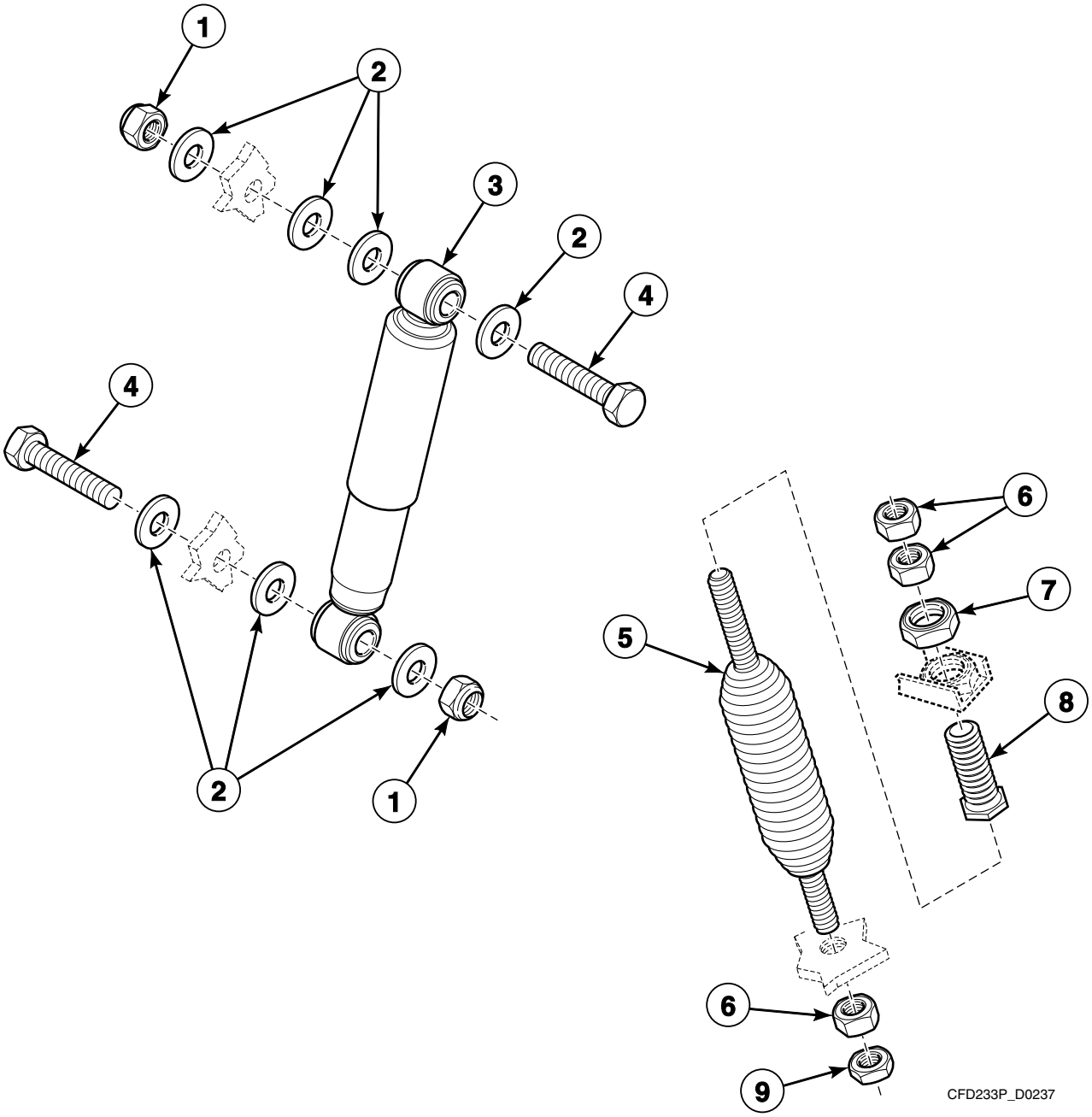

© Copyright, Alliance Laundry Systems LLC – DO NOT COPY or TRANSMIT

Shock and Spring Assembly - *75 and *304 Models Through 11/13/11

REF	PART NO.	DESCRIPTION	COMMENTS
1	204/00113/00	Nut	
2	201/00001/00	Washer	
3	247/00008/00	Shock Absorber	
4	206/00153/00	Bolt	
5	B12440101	Suspension Spring	
6	204/00012/00	Nut	
7	204/00016/00	Nut	
8	224/00046/00	Bolt	
9	204/00019/00	Nut	

© Copyright, Alliance Laundry Systems LLC – DO NOT COPY or TRANSMIT

Shock and Spring Assembly - *75 and *304 Models
Starting 11/14/11

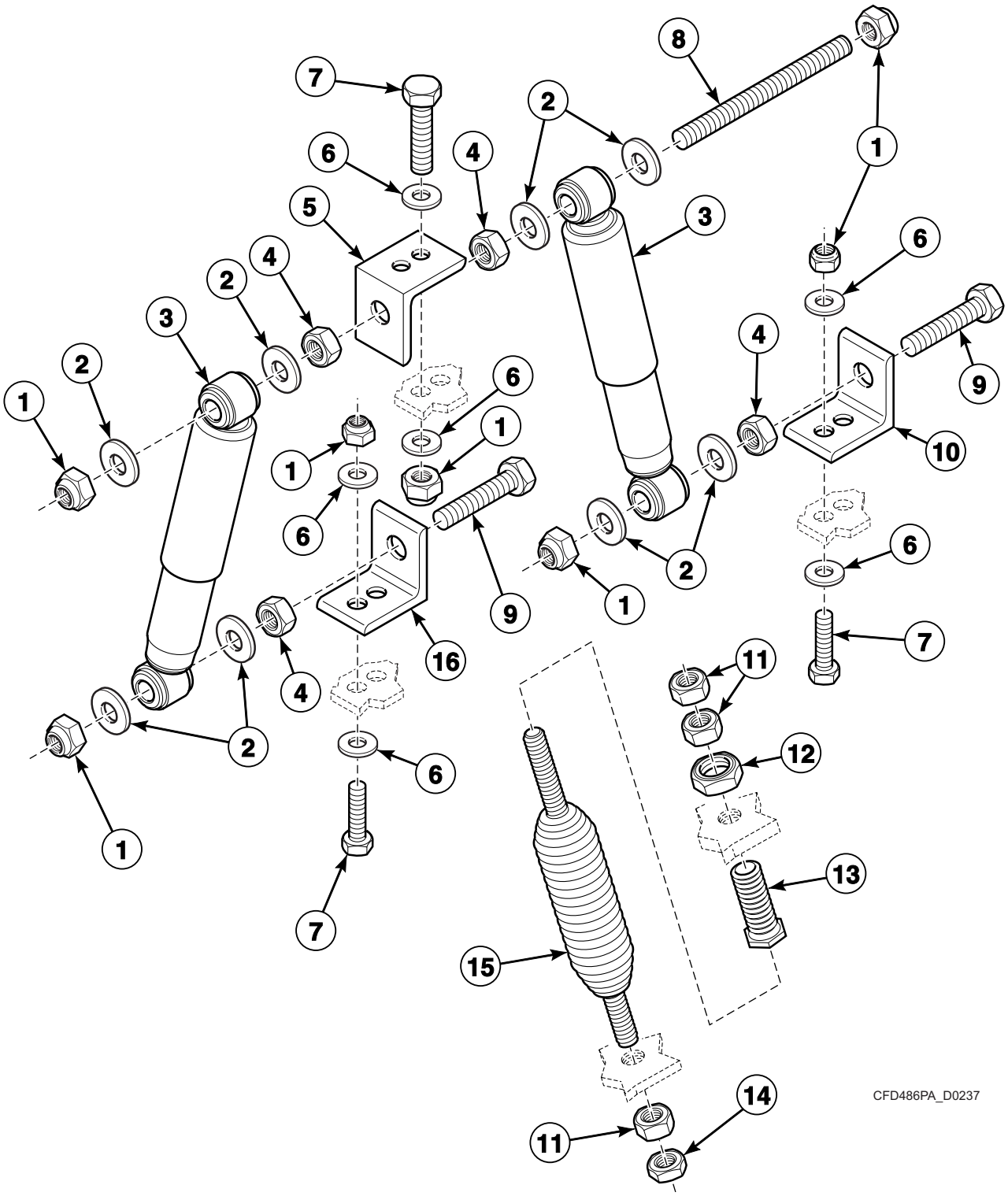

© Copyright, Alliance Laundry Systems LLC – DO NOT COPY or TRANSMIT

Shock and Spring Assembly - *75 and *304 Models Starting 11/14/11

REF	PART NO.	DESCRIPTION	COMMENTS
	B12460901	Shock Absorber Service Kit	Includes items 1-3, 5, 6, 8-11 and 16, 206/00119/00 Bolt, 204/00110/00 Nut, B12459801 Out-of-Balance Frame, B12456101 Support Bracket, B12456201 Support Bracket, 206/00027/00 Bolt, 202/00004/00 Washer, 204/00114/00 Nut, B12463301 Small Caliber, B12463201 Large Caliber
1	204/00113/00	Nut	
2	201/00001/00	Washer	
3	247/00008/00	Shock Absorber	
4	204/00012/00	Nut	
5	B12455401	Support	
6	201/00010/00	Washer	
7	206/00087/00	Bolt	
8	B12511601	Threaded Rod	
9	206/00153/00	Bolt	
10	B12455301	Support	
11	204/00012/00	Nut	
12	204/00016/00	Nut	
13	224/00046/00	Bolt	
14	204/00019/00	Nut	
15	B12456301	Suspension Spring	
16	B12418401	Support	

© Copyright, Alliance Laundry Systems LLC – DO NOT COPY or TRANSMIT

Tub and Drum - *50, *55, *176 and *234 Models (Drawing 1 of 3)

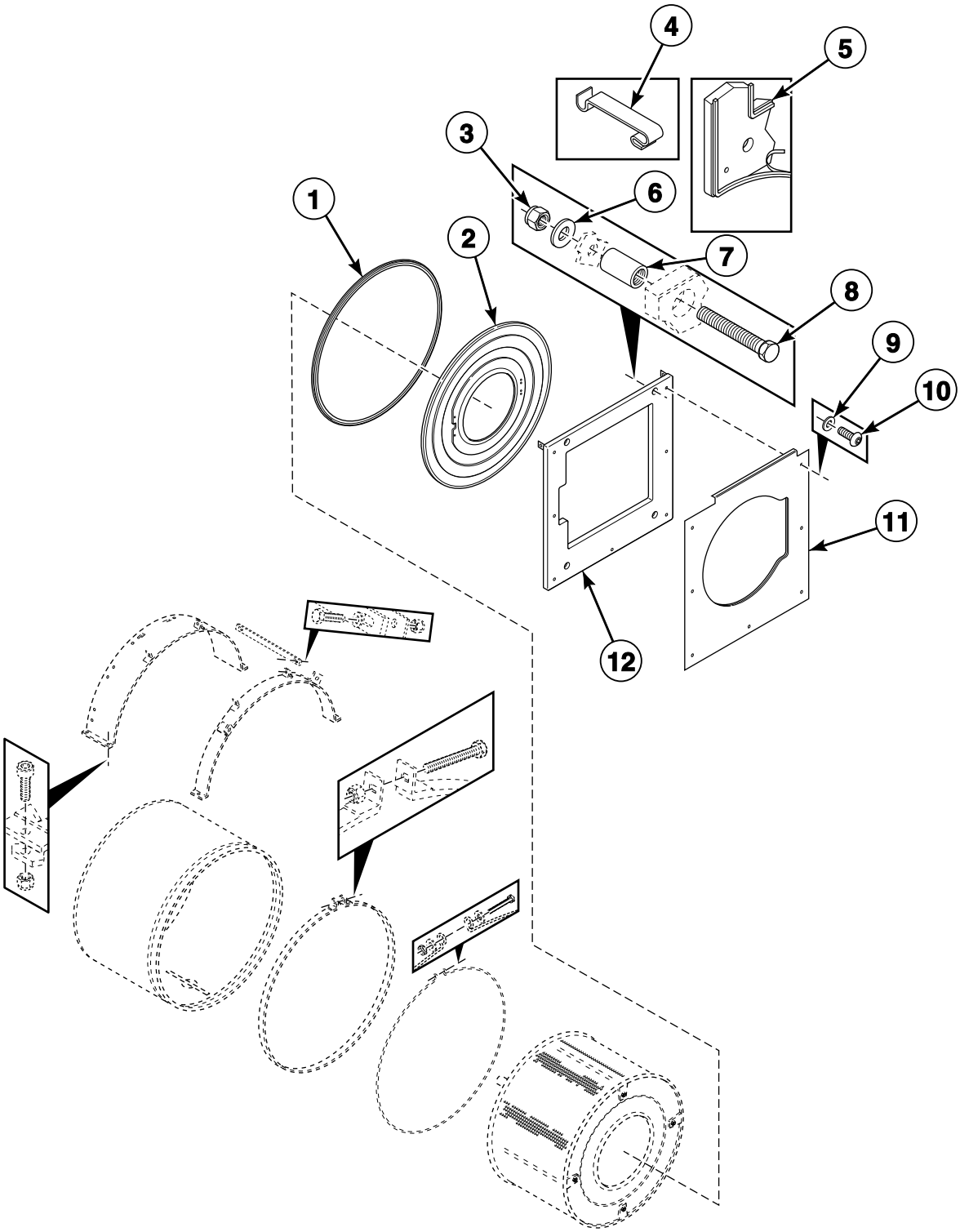

CFD234P_D0237

© Copyright, Alliance Laundry Systems LLC – DO NOT COPY or TRANSMIT

Tub and Drum - *50, *55, *176 and *234 Models (Drawing 1 of 3)

REF	PART NO.	DESCRIPTION	COMMENTS
1	223/00242/00	Tub Front Gasket	
2	138/00001/00	Tub Front	
3	204/00113/00	Nut	
4	217/00008/00	Tub Front Panel Clip	
5	246/00092/00	Gasket	Per meter
6	201/00001/00	Washer	
7	115/00151/00	Spacer	
8	206/00071/00	Bolt	
9	202/00112/00	Washer	
10	205/00103/00	Bolt	
11	111/05015/00	Door Front Panel	
12	115/00140/00	Counterweight	

© Copyright, Alliance Laundry Systems LLC – DO NOT COPY or TRANSMIT

Tub and Drum - *50, *55, *176 and *234 Models (Drawing 2 of 3)

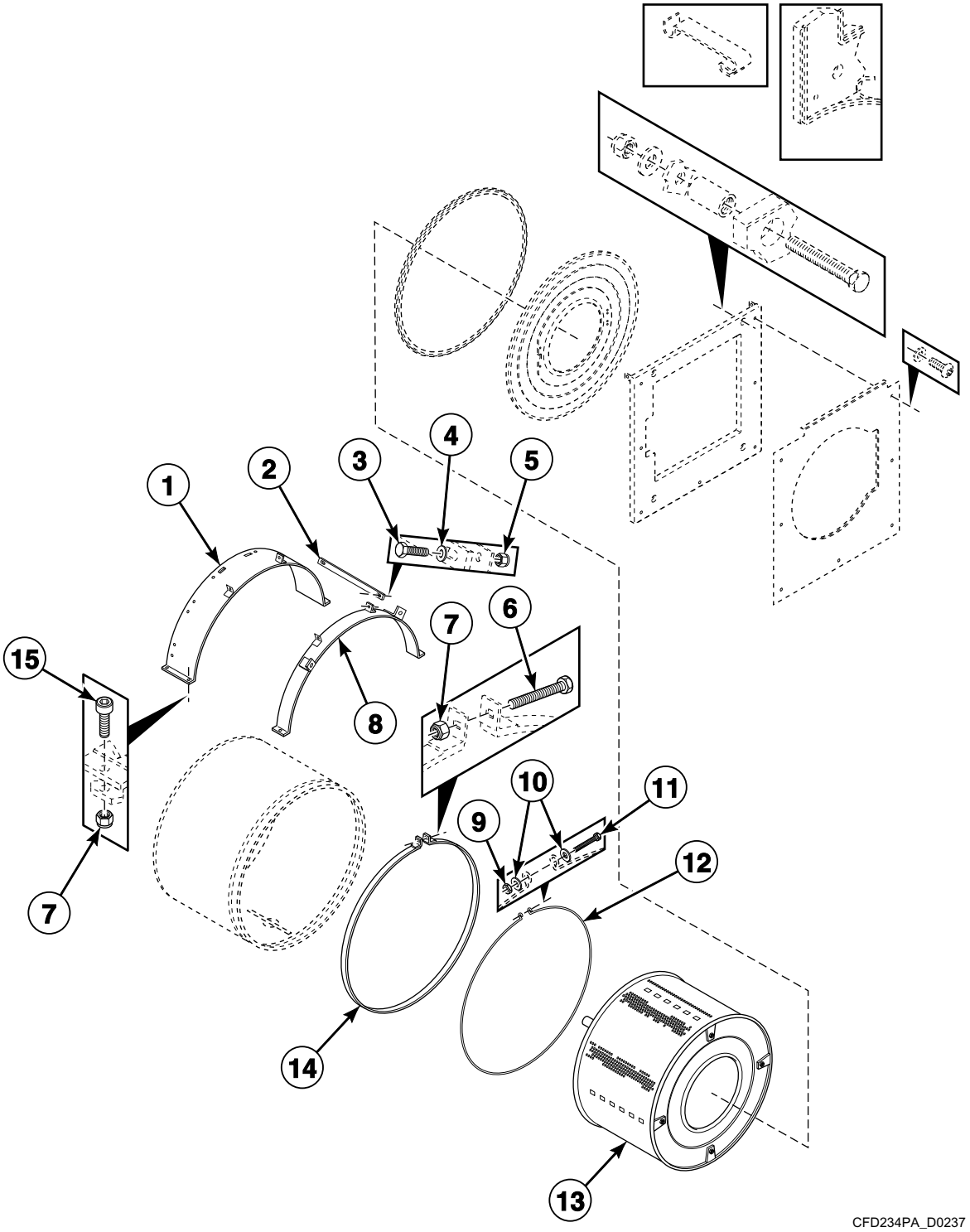

© Copyright, Alliance Laundry Systems LLC – DO NOT COPY or TRANSMIT

Tub and Drum - *50, *55, *176 and *234 Models (Drawing 2 of 3)

REF	PART NO.	DESCRIPTION	COMMENTS
1	N/A	Tightening Ring	
2	N/A	Tightening Ring Assembly	Models CHF055ANH, CHF055MNH, CHF234ANH, CHF234MNH, CSHW50P, IHF055ANH, IHF055MNH, IHF234ANH, IHF234MNH and IHF234ZNH
3	206/00009/00	Bolt	
4	201/00010/00	Washer	
5	204/00109/00	Nut	
6	206/00066/00	Bolt	
7	204/00111/00	Nut	
8	N/A	Tightening Ring	*50 and *176 models
	115/00161/00	Tub Front Mounting Strap	*55 and *234 models
9	204/00009/00	Nut	
10	201/00007/00	Washer	
11	206/00032/00	Bolt	
12	238/00011/00	Tub Clamp Ring	
13	B12327101	Cylinder and Shaft Assembly	*50, *55 and *234 models; Models through 1/30/11; Used with 119/00001/01 Seal Holder Assembly
	B12543201	Basket Kit	*50, *55 and *234 models; Models through 1/30/11; 3 mm; Used with B12333701 Seal Holder Assembly; Includes B12380901 Basket and 3884P Bearing and Seal Kit
	B12380901	Basket	*50, *55 and *234 models; Models starting 1/31/11; 3 mm; Used with B12333701 Seal Holder Assembly
	B12381001	Basket	*50, *55 and *234 models; Models starting 1/31/11; 9 mm; Used with B12333701 Seal Holder Assembly
	123/10011/00	Drum	*176 models
14	137/00008/00	Tub Mounting Strap	*50, *55 and *234 models
15	206/00111/00	Screw	

N/A = Part no longer available

© Copyright, Alliance Laundry Systems LLC – DO NOT COPY or TRANSMIT

Tub and Drum - *50, *55, *176 and *234 Models (Drawing 3 of 3)

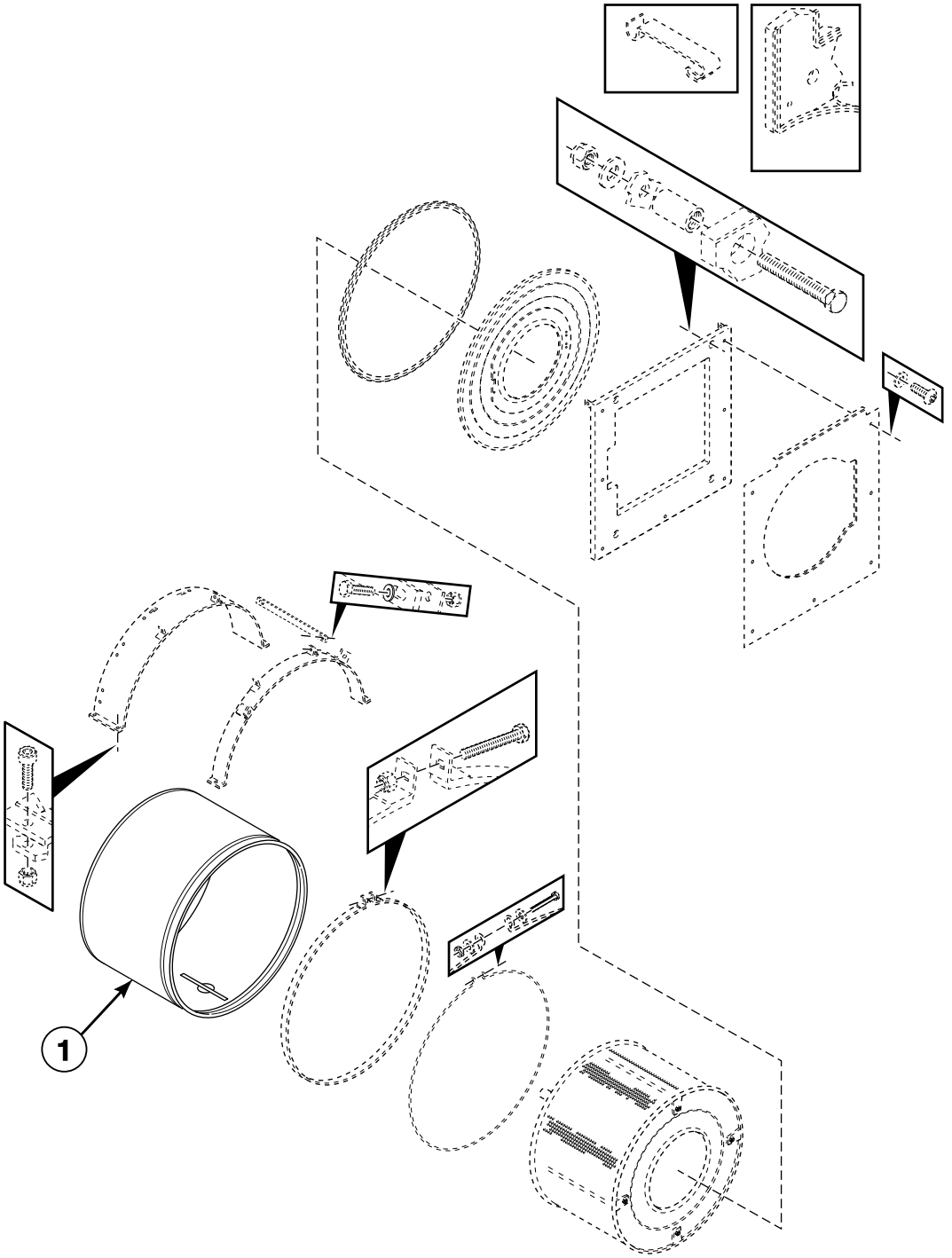

CFD234PB_D0237

© Copyright, Alliance Laundry Systems LLC – DO NOT COPY or TRANSMIT

Tub and Drum - *50, *55, *176 and *234 Models (Drawing 3 of 3)

REF	PART NO.	DESCRIPTION	COMMENTS
1	B12330101	Tub	*50, *55 and *234 models; Electric
	119/00251/00	Tub	*50, *55 and *234 models; Steam heat
	B12330201	Tub	*50, *55 and *234 models; Boiler
	119/00250/00	Tub	*50, *55 and *234 models; Electric and steam heat
	119/00246/00	Tub	*176 models; Electric
	B12330701	Tub	*176 models; Steam heat
	119/00243/00	Tub	*176 models; Boiler
	119/00245/00	Tub	*176 models; Electric and steam heat
	119/00253/00	Tub	*50, *55 and *234 models; Electric and steam heat with circulation pump
	119/00248/00	Tub	*176 models; Electric and steam heat with circulation pump

© Copyright, Alliance Laundry Systems LLC – DO NOT COPY or TRANSMIT

Tub and Drum - *75 and *304 Models

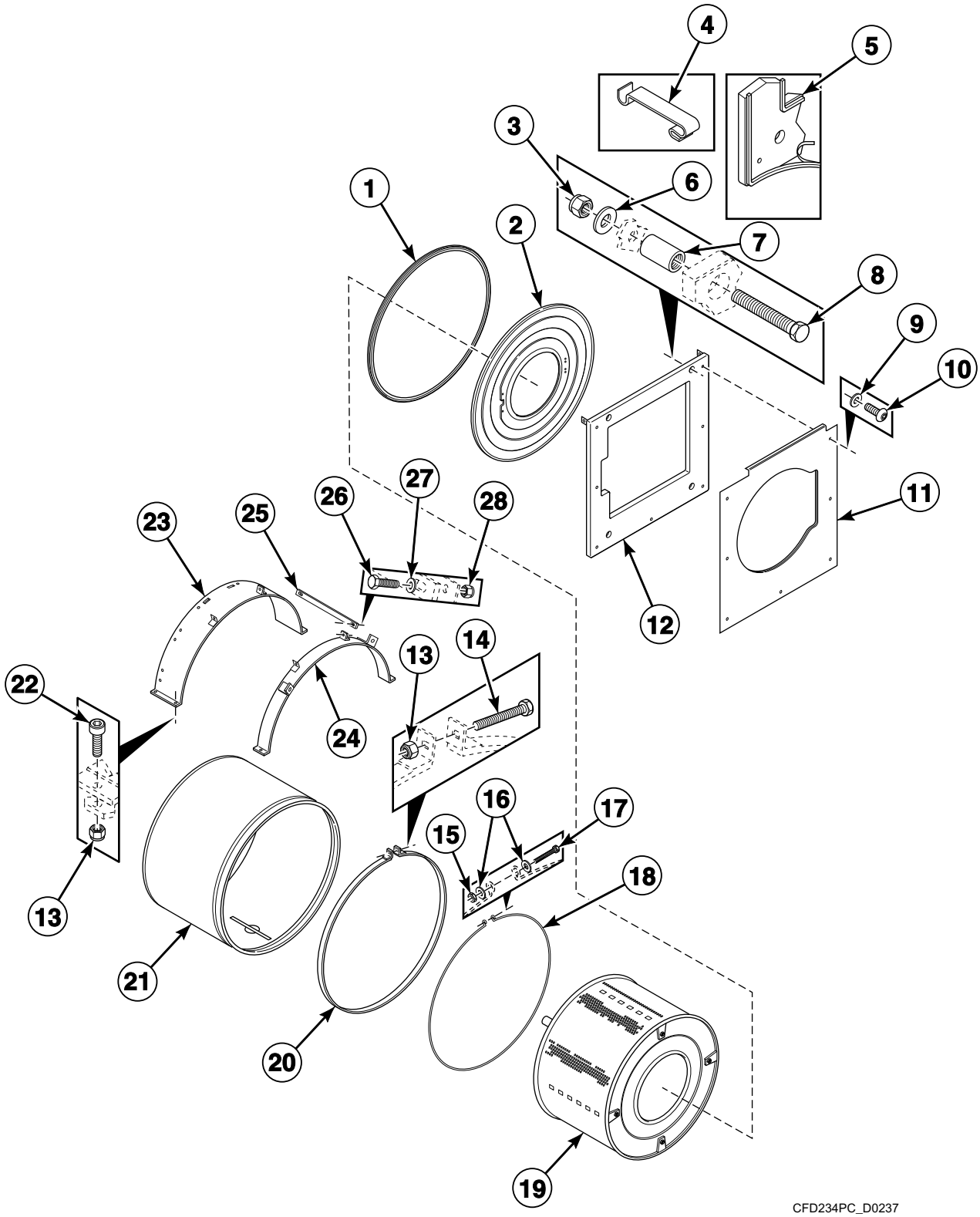

© Copyright, Alliance Laundry Systems LLC – DO NOT COPY or TRANSMIT

Tub and Drum - *75 and *304 Models

REF	PART NO.	DESCRIPTION	COMMENTS
1	231/00001/00	Tub Front Gasket	
2	131/00002/00	Front Panel	
3	204/00113/00	Nut	
4	217/00008/00	Tub Front Panel Clip	
5	246/00092/00	Gasket	Per meter
6	201/00001/00	Washer	
7	115/00151/00	Spacer	
8	206/00071/00	Bolt	
9	202/00101/00	Washer	
10	205/00103/00	Bolt	
11	111/32945/00	Door Front Panel	
12	115/00136/00	Counterweight	
13	204/00009/00	Nut	
14	206/00066/00	Bolt	
15	204/00009/00	Nut	
16	201/00007/00	Washer	
17	206/00032/00	Bolt	
18	231/00010/00	Tub Front Ring Clamp	
19	N/A	Drum	Models through Serial No. 10040300102
	B12537901	Basket and Pulley Kit	Models through Serial No. 10040300102; Includes B12327301 Basket, 226/00150/00 Basket Pulley, 206/00056/00 Screw, 226/00152/00 Motor Pulley, 226/00151/00 Belt and 212/00026/00 Key
	B12327301	Drum	Models starting Serial No. 10040300103
20	131/00010/00	Tub Strap	
21	119/10208/00	Tub	Boiler
	119/10210/00	Tub	Steam heating
	B12330501	Tub	Electric and steam heat
22	206/00111/00	Screw	
23	N/A	Tightening Ring	
24	115/00163/00	Tub Tightening Ring	
25	N/A	Tightening Ring Assembly	
26	206/00009/00	Bolt	
27	201/00010/00	Washer	
28	204/00109/00	Nut	

N/A = Part no longer available

© Copyright, Alliance Laundry Systems LLC – DO NOT COPY or TRANSMIT

Bearing Assembly - *50, *55, *176 and *234 Models Through 1/30/11

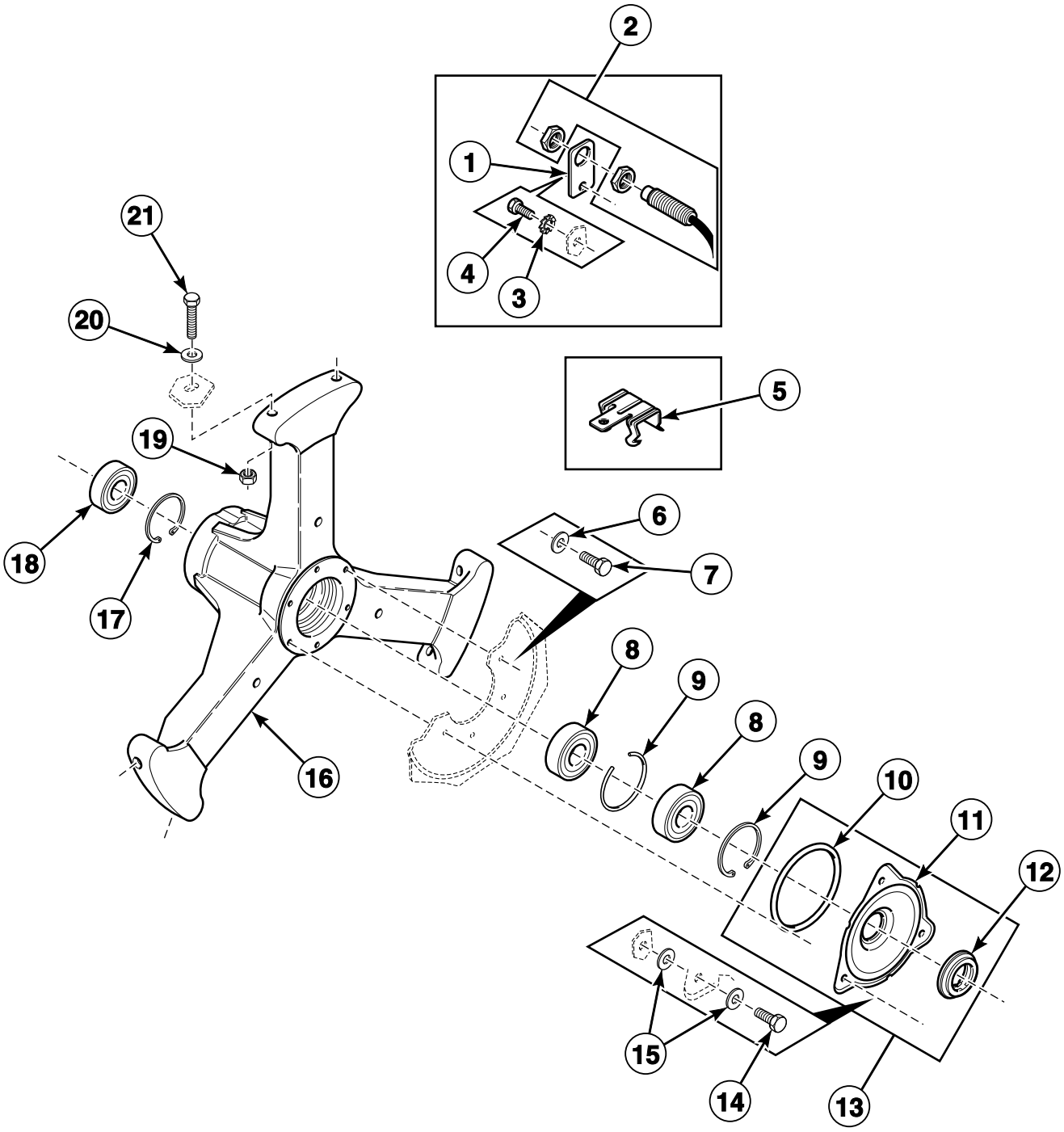

CFD235P_D0237

© Copyright, Alliance Laundry Systems LLC – DO NOT COPY or TRANSMIT

Bearing Assembly - *50, *55, *176 and *234 Models Through 1/30/11

REF	PART NO.	DESCRIPTION	COMMENTS
	891P3	Bearing Replacement Kit	Includes 9001117 Seal Holder Assembly, 9001225 Washer, 9001272 Bolt, 9001438 Bearing, 9001483 Counter Ring, 2230024240 Gasket, 9001548 Gasket, F100134 Bearing and F8388601P Inlet Deflector
	385P4	Bearing Replacement Tool Kit	
1	N/A	Speed Detector Support	
2	209/00400/00	Speed Detector	
3	203/00004/00	Washer	
4	205/00104/00	Bolt	
5	224/00051/00	Caddy Bracket	
	224/00052/00	Caddy Bracket	
6	201/00201/00	Washer	
7	205/00104/00	Bolt	
8	212/00004/00	Ball Bearing	
9	212/00006/00	Retainer Ring	
10	217/00002/00	O-Ring	
11	119/00001/00	Seal Plate	
12	219/00003/00	Shaft Seal	
13	119/00001/01	Seal Holder Assembly	Models through 1/30/11; Used with 123/10015/00 Cylinder and Shaft Assembly
	B12333701	Seal Plate Assembly	Models starting 1/31/11; Used with B12380901 Basket and B12381001 Basket
14	205/00102/00	Bolt	
15	201/00202/00	Washer	
16	139/10006/00	Bearing Housing Assembly	Includes items 8, 9, 17 and 18
17	212/00037/00	Retainer Ring	
18	F100134	Bearing	
19	204/00113/00	Nut	
20	201/00001/00	Washer	
21	248/00114/00	Bolt	

N/A = Part no longer available

© Copyright, Alliance Laundry Systems LLC – DO NOT COPY or TRANSMIT

Bearing Assembly - *50, *55, *176 and *234 Models Starting 1/31/11

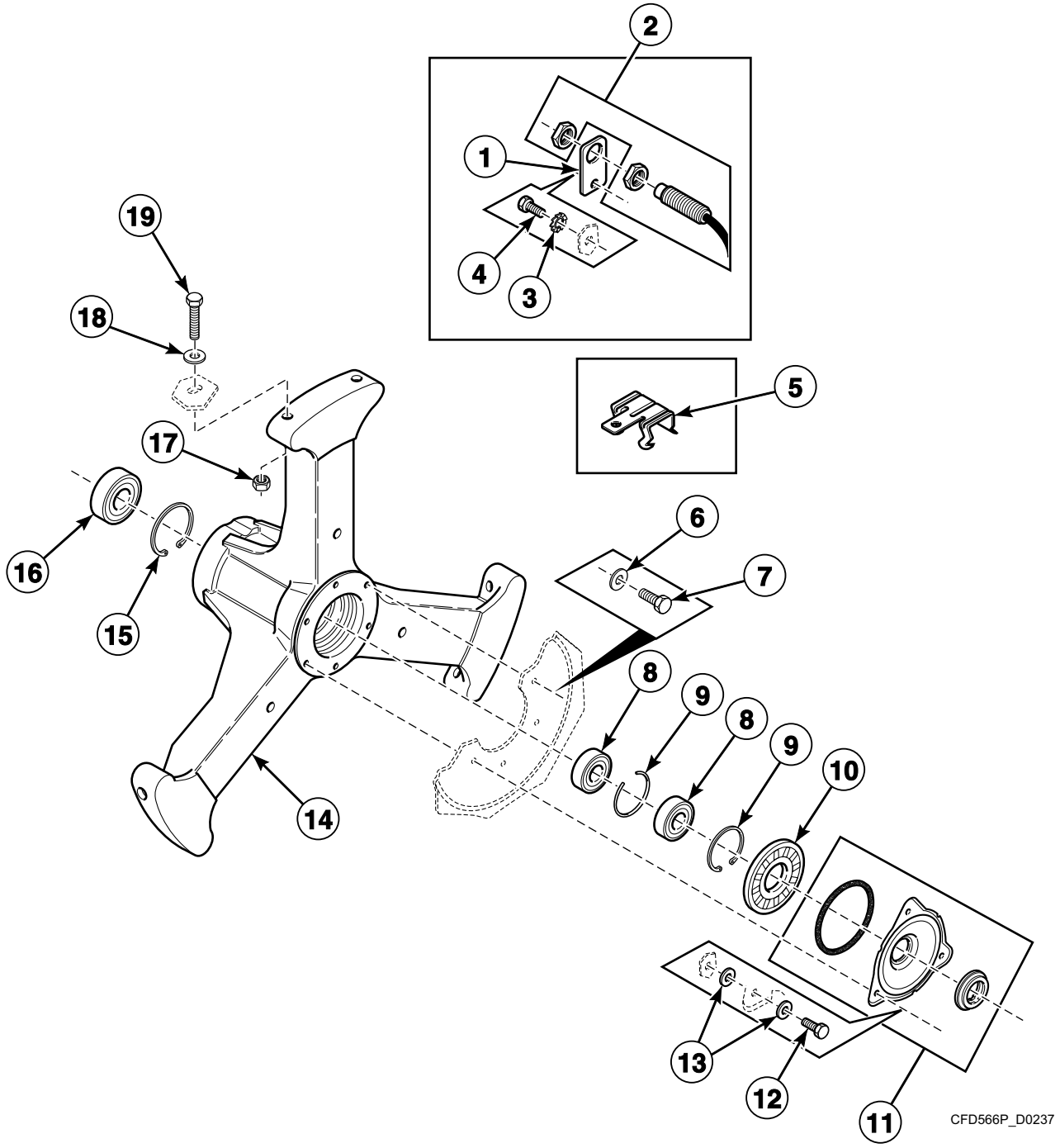

© Copyright, Alliance Laundry Systems LLC – DO NOT COPY or TRANSMIT

Bearing Assembly - *50, *55, *176 and *234 Models Starting 1/31/11

REF	PART NO.	DESCRIPTION	COMMENTS
	3884P	Bearing and Seal Kit	
	381P3	Bearing Replacement Tool Kit	
1	N/A	Speed Detector Support	
2	209/00400/00	Speed Detector	
3	203/00004/00	Washer	
4	205/00104/00	Bolt	
5	224/00051/00	Caddy Bracket	
	224/00052/00	Caddy Bracket	
6	201/00201/00	Washer	
7	205/00104/00	Bolt	
8	212/00004/00	Ball Bearing	
9	212/00006/00	Retainer Ring	
10	B12332301	Lip Seal	
11	B12333701	Seal Plate Assembly	Models starting 1/31/11; Used with B12380901 Basket and B12381001 Basket; Includes 219/00004/00 Counter Ring, 223/00242/00 Tub Front Gasket and items 6, 8, 10-12 and 16
12	205/00102/00	Bolt	
13	201/00202/00	Washer	
14	139/10006/00	Bearing Housing Assembly	Includes items 8, 9, 15 and 16
15	212/00037/00	Retainer Ring	
16	F100134	Bearing	
17	204/00113/00	Nut	
18	201/00001/00	Washer	
19	248/00114/00	Bolt	

N/A = Part no longer available

© Copyright, Alliance Laundry Systems LLC – DO NOT COPY or TRANSMIT

Bearing Assembly - *75 and *304 Models

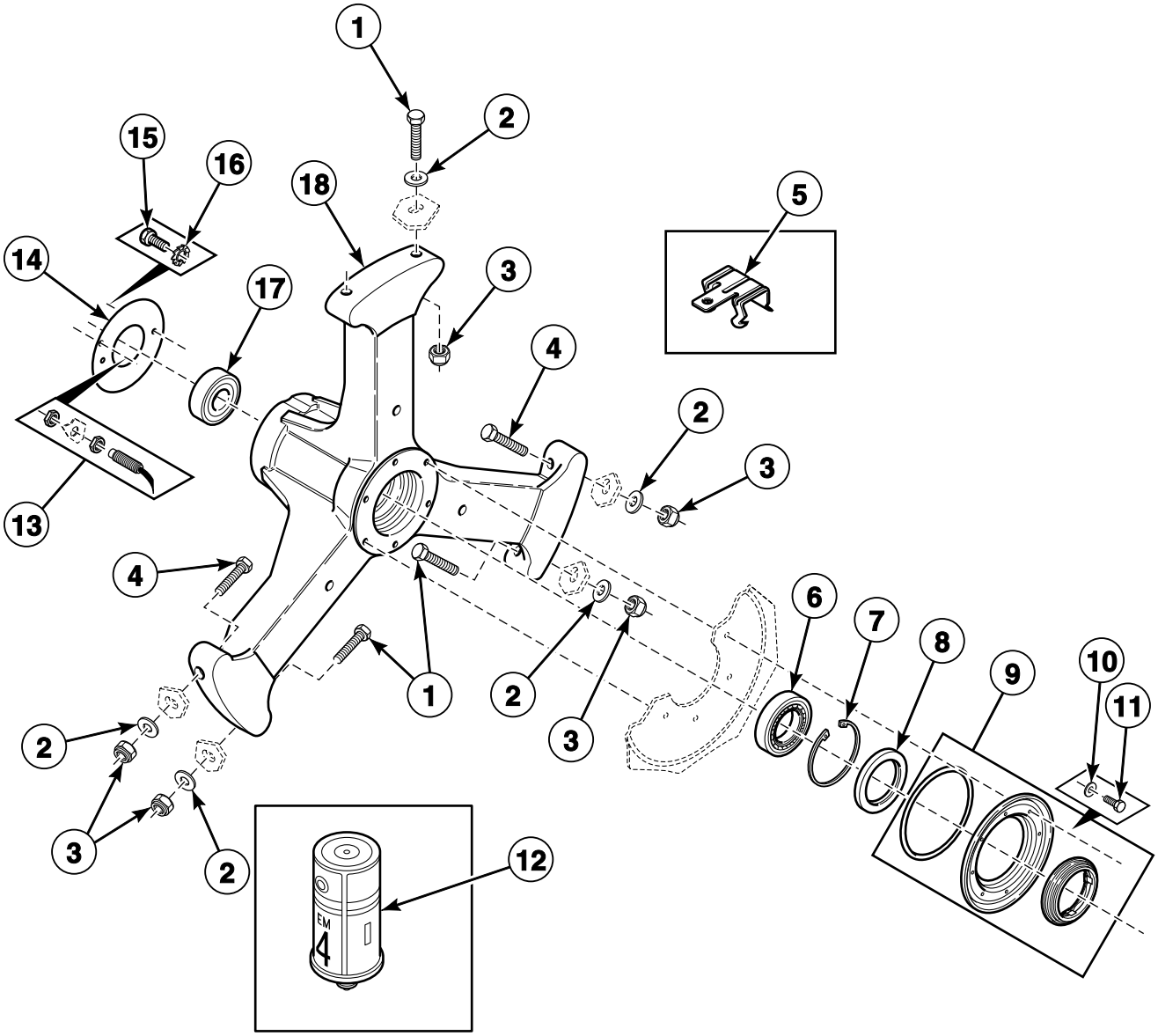

CFD236P_D0237

© Copyright, Alliance Laundry Systems LLC – DO NOT COPY or TRANSMIT

Bearing Assembly - *75 and *304 Models

REF	PART NO.	DESCRIPTION	COMMENTS
	892P3	Bearing Replacement Kit	Includes 9001134 Shaft Seal, 9001226 Washer, 9001274 Bolt, 9001437 Lubricator, 9001438 Bearing, 9001439 Bearing, 9001441 Grease Ring, 9001548 Gasket, 9001601 Counter Ring, 9001744 Seal Holder Assembly and F8388601P Inlet Deflector
	385P4	Bearing Replacement Tool Kit	
1	206/00122/00	Bolt	
2	201/00001/00	Washer	
3	204/00113/00	Nut	
4	206/00047/00	Bolt	
5	224/00052/00	Caddy Bracket	
	224/00051/00	Caddy Bracket	
6	212/00005/00	Roller Bearing	
7	212/00006/00	Retainer Ring	
8	212/00007/00	Grease Ring	
9	131/00035/01	Seal Holder Assembly	
10	201/00202/00	Washer	
11	205/00104/00	Bolt	
12	212/00002/00	Lubricator	
13	209/00400/00	Speed Detector	
14	112/00004/00	Bearing Housing Cover	
15	206/00010/00	Bolt	
16	203/00003/00	Washer	
17	212/00004/00	Ball Bearing	
18	212/00036/00	Bearing Housing Assembly	
	212/00036/01	Bearing Housing Assembly	

© Copyright, Alliance Laundry Systems LLC – DO NOT COPY or TRANSMIT

Drum, Pulley and Belt - *50, *55, *176 and *234 Models

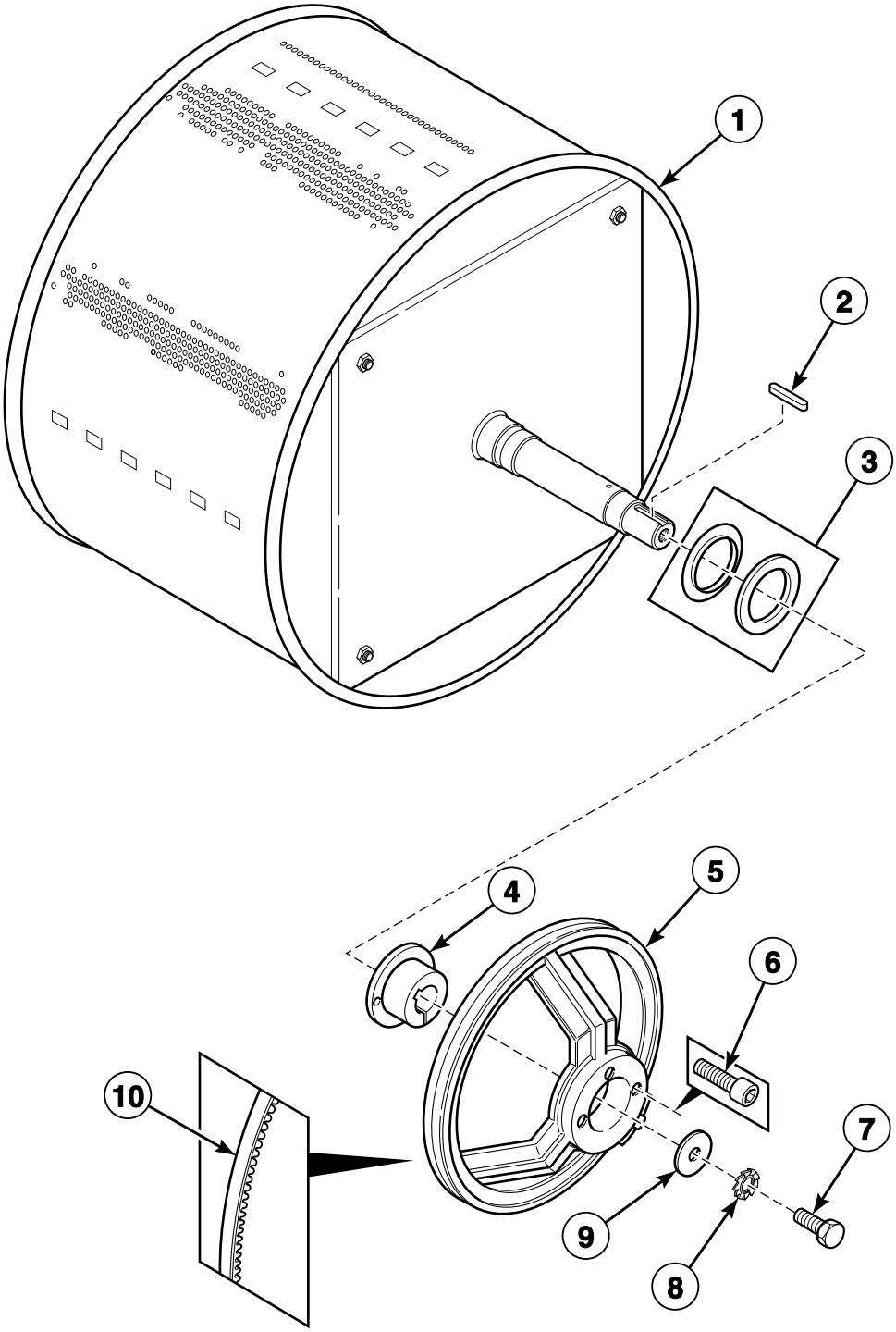

CFD37P_D0237

© Copyright, Alliance Laundry Systems LLC – DO NOT COPY or TRANSMIT

Drum, Pulley and Belt - *50, *55, *176 and *234 Models

REF	PART NO.	DESCRIPTION	COMMENTS
1	B12327101	Cylinder and Shaft Assembly	*50, *55 and *234 models; Models through 1/30/11; Used with 119/00001/01 Seal Holder Assembly
	B12380901	Basket	*50, *55 and *234 models; Models starting 1/31/11; Used with B12333701 Seal Holder Assembly; 3 mm
	B12381001	Basket	*50, *55 and *234 models; Models starting 1/31/11; Used with B12333701 Seal Holder Assembly; 9 mm
	123/10011/00	Drum	*176 models
2	212/00026/00	Key	
3	219/00004/00	Counter Ring	
4	239/00013/00	Pulley	
5	967P3	Pulleys and Belt Kit	Models through Serial No. 08010230051; Includes 226/00148/00 Pulley, 226/00149/00 Belt and 185/00086/00 Pulley
	226/00148/00	Pulley	Models starting Serial No. 08010230052
6	N/A	Bolt	
7	206/00004/00	Bolt	
8	203/00001/00	Washer	
9	201/00011/00	Washer	
10	226/00102/01	Belt	Models through Serial No. 08010230051
	226/00149/00	Belt	Models starting Serial No. 08010230052

N/A = Part no longer available

© Copyright, Alliance Laundry Systems LLC – DO NOT COPY or TRANSMIT

Drum, Pulley and Belt - *75 and *304 Models (Drawing 1 of 2)

Models Through Serial No. 10040300102

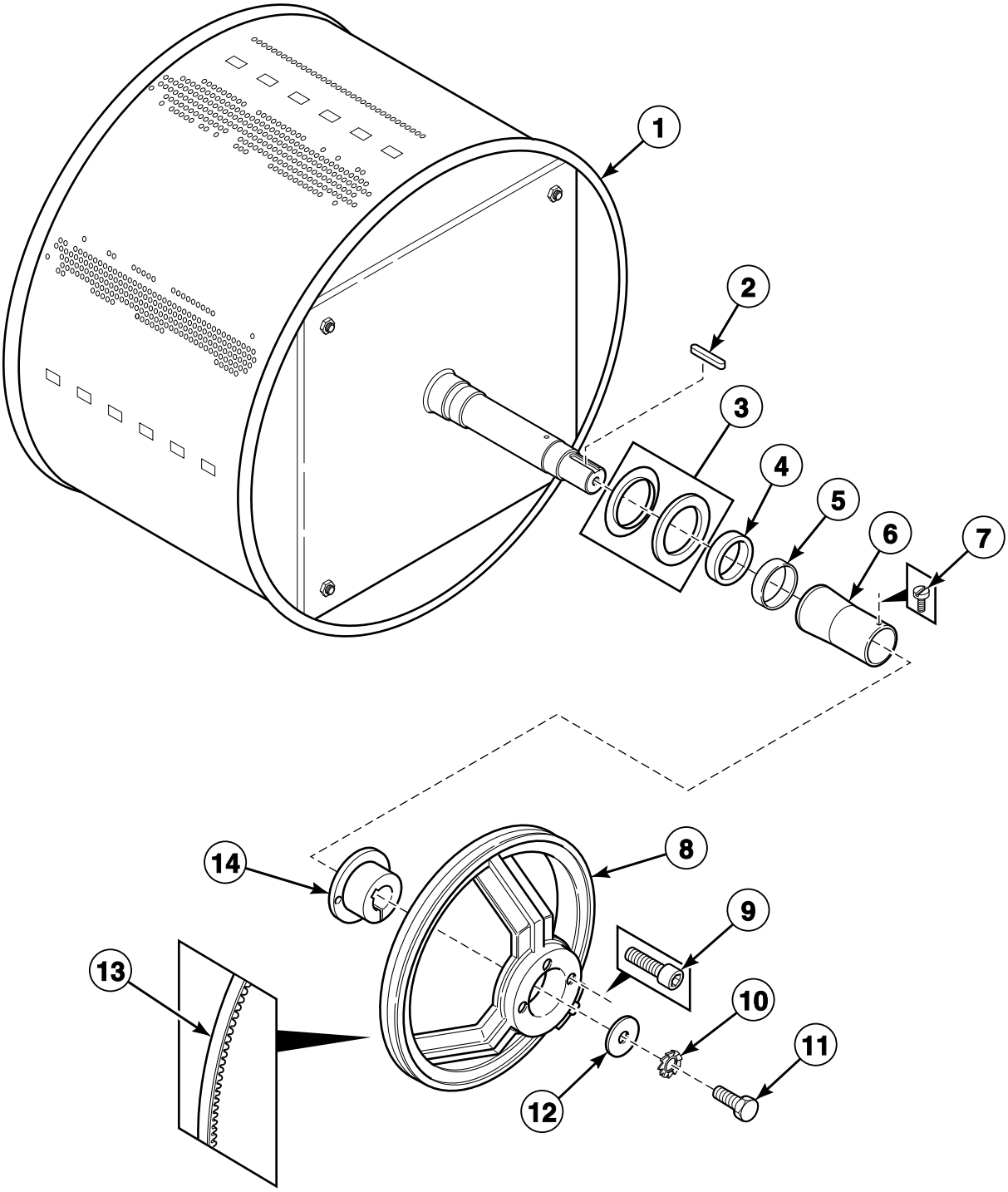

© Copyright, Alliance Laundry Systems LLC – DO NOT COPY or TRANSMIT

Drum, Pulley and Belt - *75 and *304 Models (Drawing 1 of 2)

REF	PART NO.	DESCRIPTION	COMMENTS
1	N/A	Drum	
	B12537901	Basket and Pulley Kit	Includes B12327301 Basket, 226/00150/00 Basket Pulley, 206/00056/00 Screw, 226/00152/00 Motor Pulley, 226/00151/00 Belt and 212/00026/00 Key
2	212/00026/00	Key	
3	232/00008/00	Counter Ring	
4	132/00009/00	Shaft Seal	
5	212/00005/00	Roller Bearing	
6	232/00020/00	Bearing Spacer	
7	207/00110/00	Screw	
8	253/00025/01	Pulley	
9	212/00009/02	Bolt	For pulley hub
10	203/00001/00	Washer	
11	204/00004/00	Nut	
12	201/00011/00	Washer	
13	226/00118/00	Belt	
14	212/00009/01	Pulley Hub	Models through 12/31/07
	239/00013/00	Pulley	Models starting 1/1/08

N/A = Part no longer available

© Copyright, Alliance Laundry Systems LLC – DO NOT COPY or TRANSMIT

Drum, Pulley and Belt - *75 and *304 Models (Drawing 2 of 2)

Models Starting Serial No. 10040300103

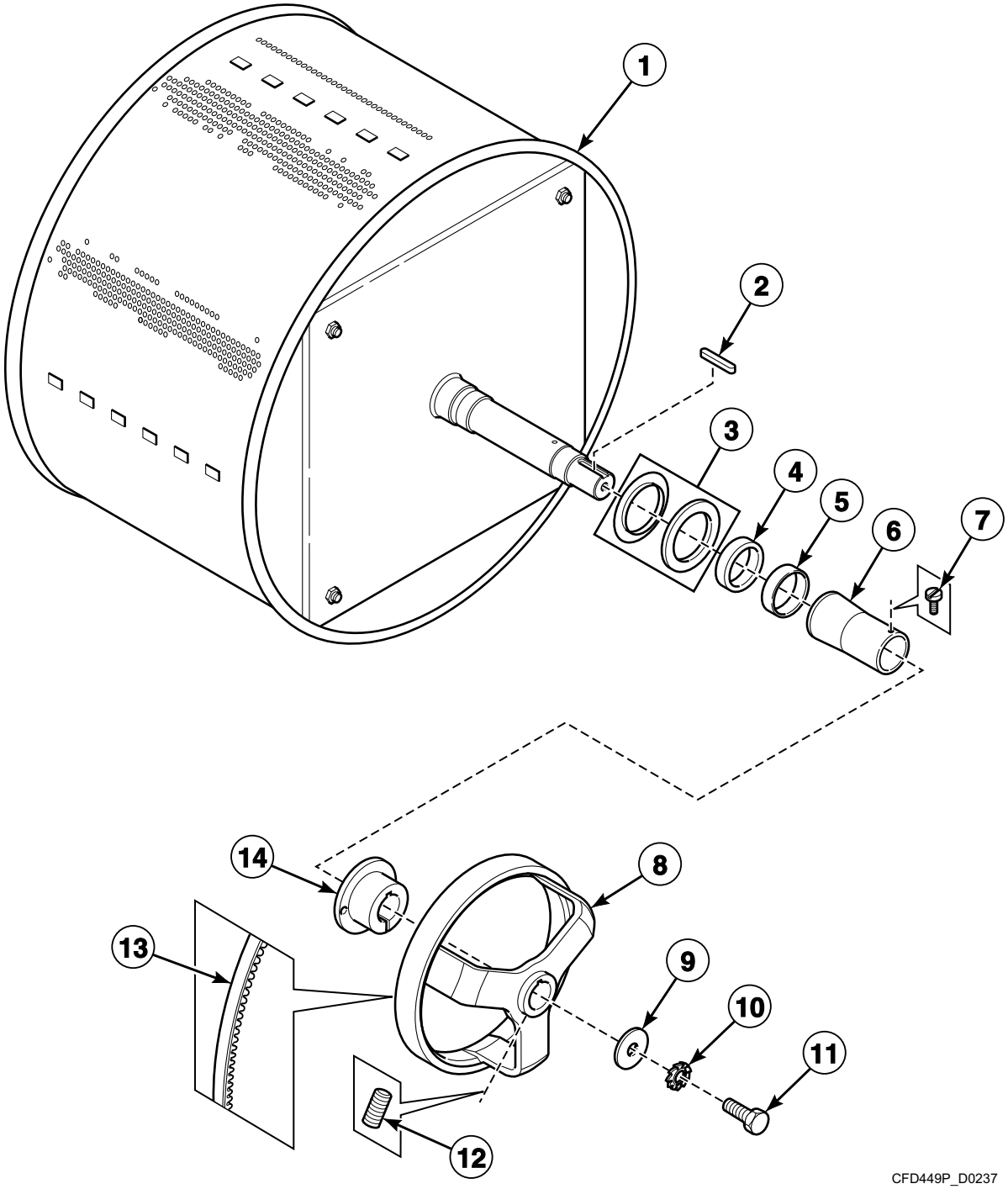

© Copyright, Alliance Laundry Systems LLC – DO NOT COPY or TRANSMIT

Drum, Pulley and Belt - *75 and *304 Models (Drawing 2 of 2)

REF	PART NO.	DESCRIPTION	COMMENTS
1	B12327301	Drum	
2	212/00026/00	Key	
3	232/00008/00	Counter Ring	
4	132/00009/00	Shaft Seal	
5	212/00005/00	Roller Bearing	
6	232/00020/00	Bearing Spacer	
7	207/00110/00	Screw	
8	226/00150/00	Pulley	
9	201/00011/00	Washer	
10	203/00001/00	Washer	
11	204/00004/00	Nut	
12	206/00056/00	Screw	
13	226/00151/00	Belt	
14	212/00009/01	Pulley Hub	Models through 12/31/07
	239/00013/00	Pulley	Models starting 1/1/08

© Copyright, Alliance Laundry Systems LLC – DO NOT COPY or TRANSMIT

Motor - *50, *55, *176 and *234 Models

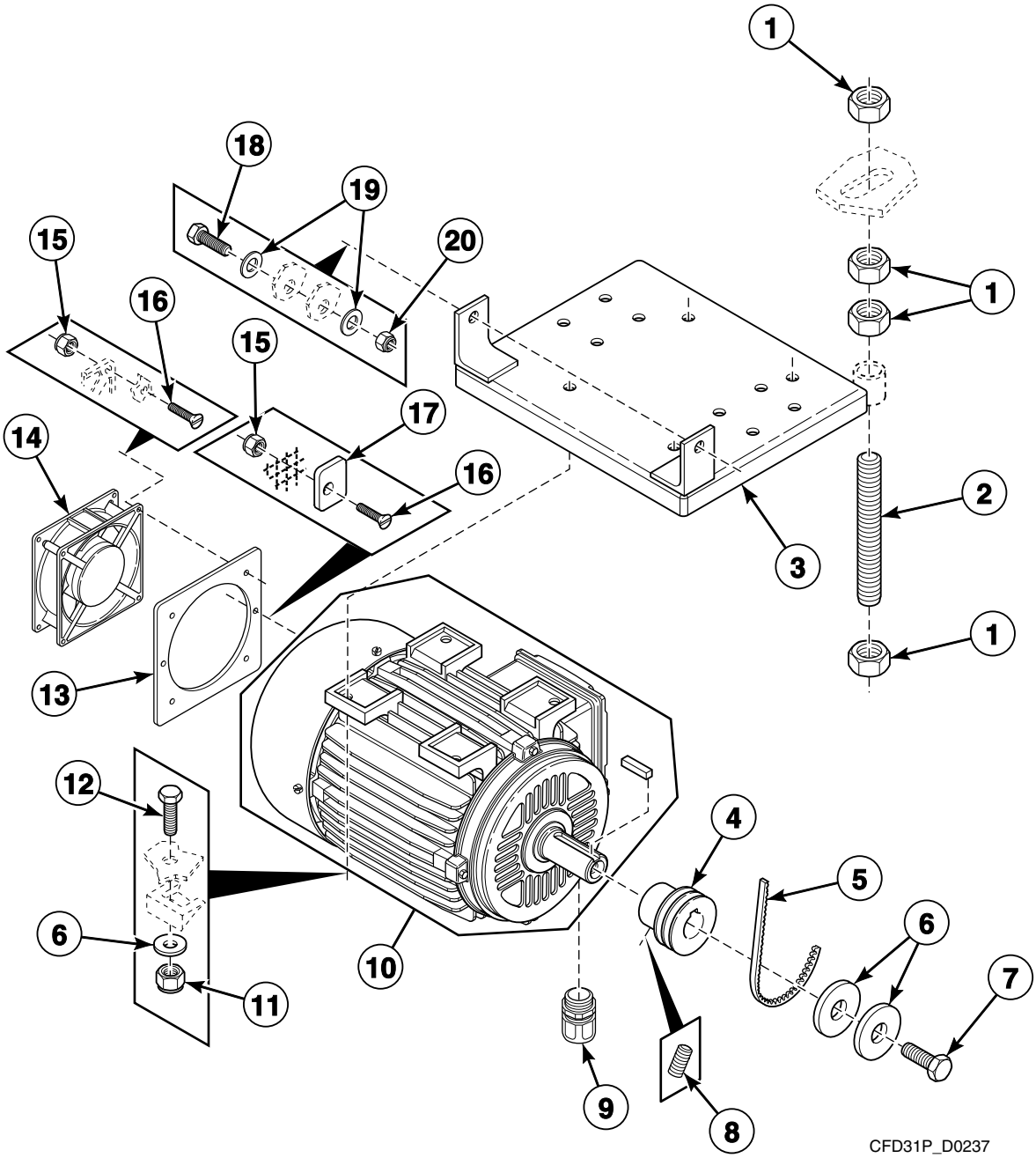

© Copyright, Alliance Laundry Systems LLC – DO NOT COPY or TRANSMIT

Motor - *50, *55, *176 and *234 Models

REF	PART NO.	DESCRIPTION	COMMENTS
1	204/00019/00	Nut	
2	N/A	Tightening Belt Piece	
3	115/10126/00	Motor Plate	*55 and *234 models
	115/00155/00	Motor Plate	*50 and *176 models
4	226/00105/00	Pulley	Models through Serial No. 08010230051
	185/00086/00	Pulley	Models starting Serial No. 08010230052
5	226/00102/01	Belt	Models through Serial No. 08010230051
	226/00149/00	Belt	Models starting Serial No. 08010230052
6	201/00004/00	Washer	
7	206/00006/00	Bolt	
8	206/00049/00	Screw	
9	211/00138/00	Cordlock	
10	B12510901	Motor	3.00 kW; 220 or 380 Volt/50 or 60 Hertz
11	204/00111/00	Nut	
12	206/00003/00	Bolt	
13	111/00243/00	Intermediate Fan Motor Plate	
14	209/00287/00	Cooling Fan	
15	204/00115/00	Nut	
16	207/00002/00	Screw	
17	117/00042/00	Retaining Ring	
18	206/00072/00	Bolt	
19	201/00002/00	Washer	
20	204/00113/00	Nut	

N/A = Part no longer available

© Copyright, Alliance Laundry Systems LLC – DO NOT COPY or TRANSMIT

Motor - *75 and *304 Models

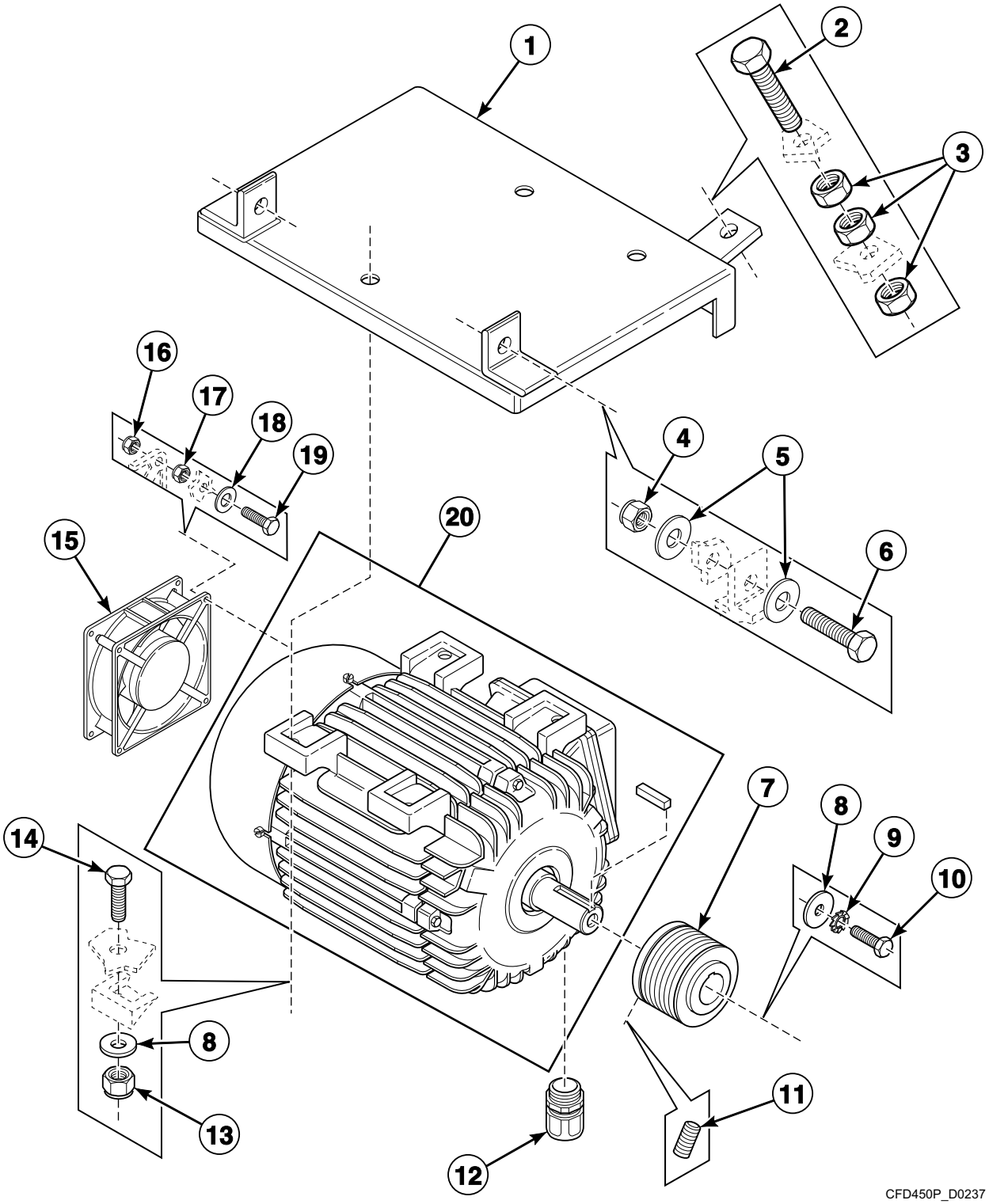

© Copyright, Alliance Laundry Systems LLC – DO NOT COPY or TRANSMIT

Motor - *75 and *304 Models

REF	PART NO.	DESCRIPTION	COMMENTS
1	115/10117/00	Motor Plate	
2	206/00047/00	Bolt	
3	204/00012/00	Nut	
4	204/00113/00	Nut	
5	201/00001/00	Washer	
6	206/00072/00	Bolt	
7	226/00117/00	Pulley	Models through Serial No. 10040300102
	226/00152/00	Pulley	Models starting Serial No. 10040300103
8	201/00004/00	Washer	
9	203/00002/00	Washer	
10	206/00006/00	Bolt	
11	206/00056/00	Screw	
12	211/00138/00	Cordlock	
13	204/00111/00	Nut	
14	206/00003/00	Bolt	
15	209/00287/00	Cooling Fan	
16	204/00114/00	Nut	
17	204/00007/00	Nut	
18	203/00006/00	Washer	
19	207/00031/00	Screw	
20	B12510401	Motor	4 kW; 220 or 380 Volt/50 or 60 Hertz

© Copyright, Alliance Laundry Systems LLC – DO NOT COPY or TRANSMIT

Drain Assembly - *50, *55, *176 and *234 Models

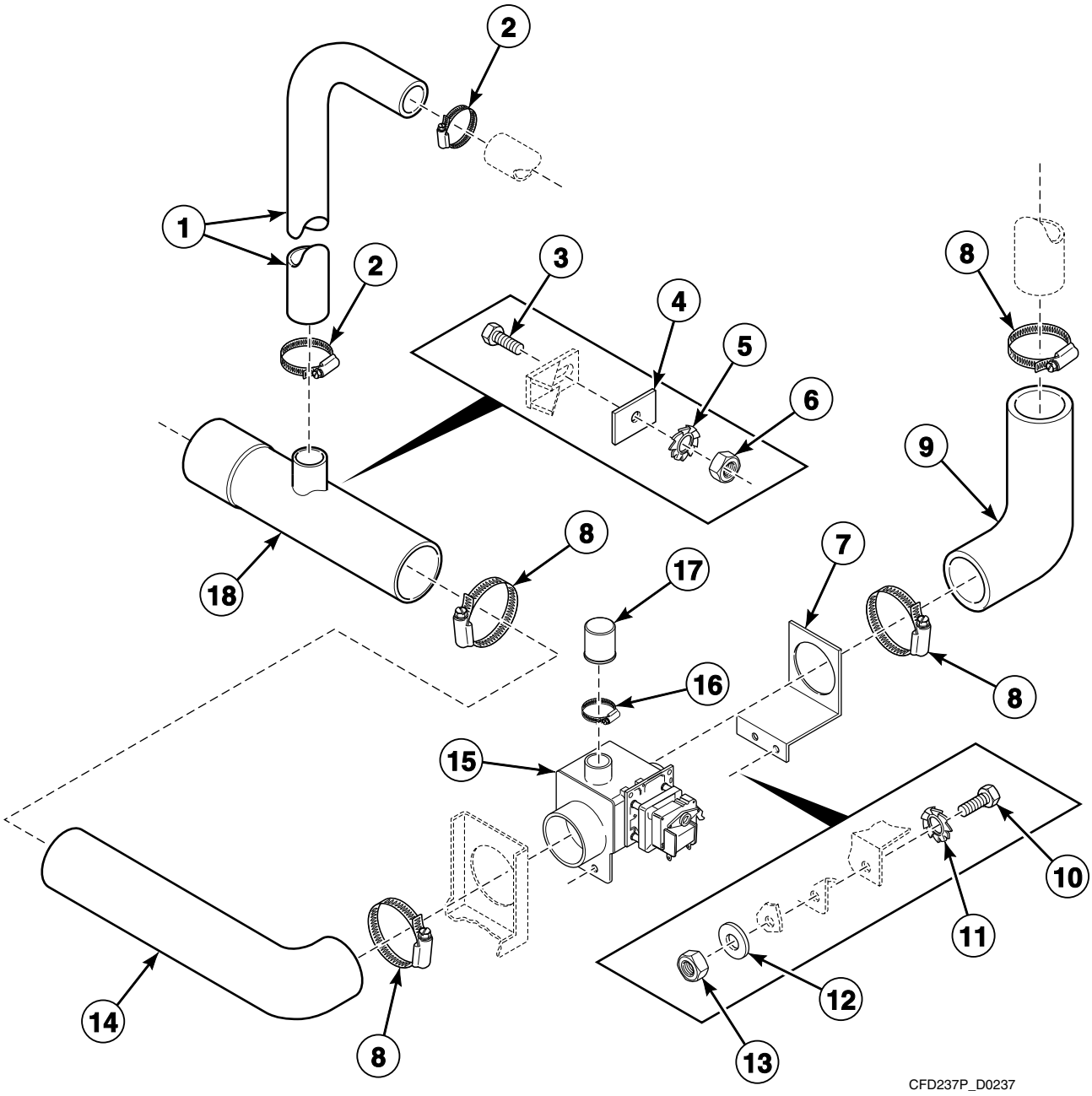

© Copyright, Alliance Laundry Systems LLC – DO NOT COPY or TRANSMIT

Drain Assembly - *50, *55, *176 and *234 Models

REF	PART NO.	DESCRIPTION	COMMENTS
1	223/00131/00	Overflow Hose	
2	223/00013/00	Hose Clamp	
3	205/00103/00	Bolt	
4	101/00007/00	Outlet Pipe Plate Assembly	
5	203/00004/00	Washer	
6	204/00106/00	Nut	
7	114/00010/00	Drain Valve Plate Assembly	
8	223/00071/00	Hose Clamp	
9	223/00133/00	Drain Tub to Drain Valve Hose	
10	206/00009/00	Bolt	
11	203/00003/00	Washer	
12	202/00002/00	Washer	
13	204/00004/00	Nut	
14	223/00135/00	Drain Valve to Drain Pipe Hose	
15	209/00075/00	Drain Valve	
16	223/00012/00	Hose Clamp	
17	223/00086/00	Drain Valve Overflow Plug	
18	223/00106/00	Drain Pipe	

© Copyright, Alliance Laundry Systems LLC – DO NOT COPY or TRANSMIT

Single Drain Assembly - *75 and *304 Models

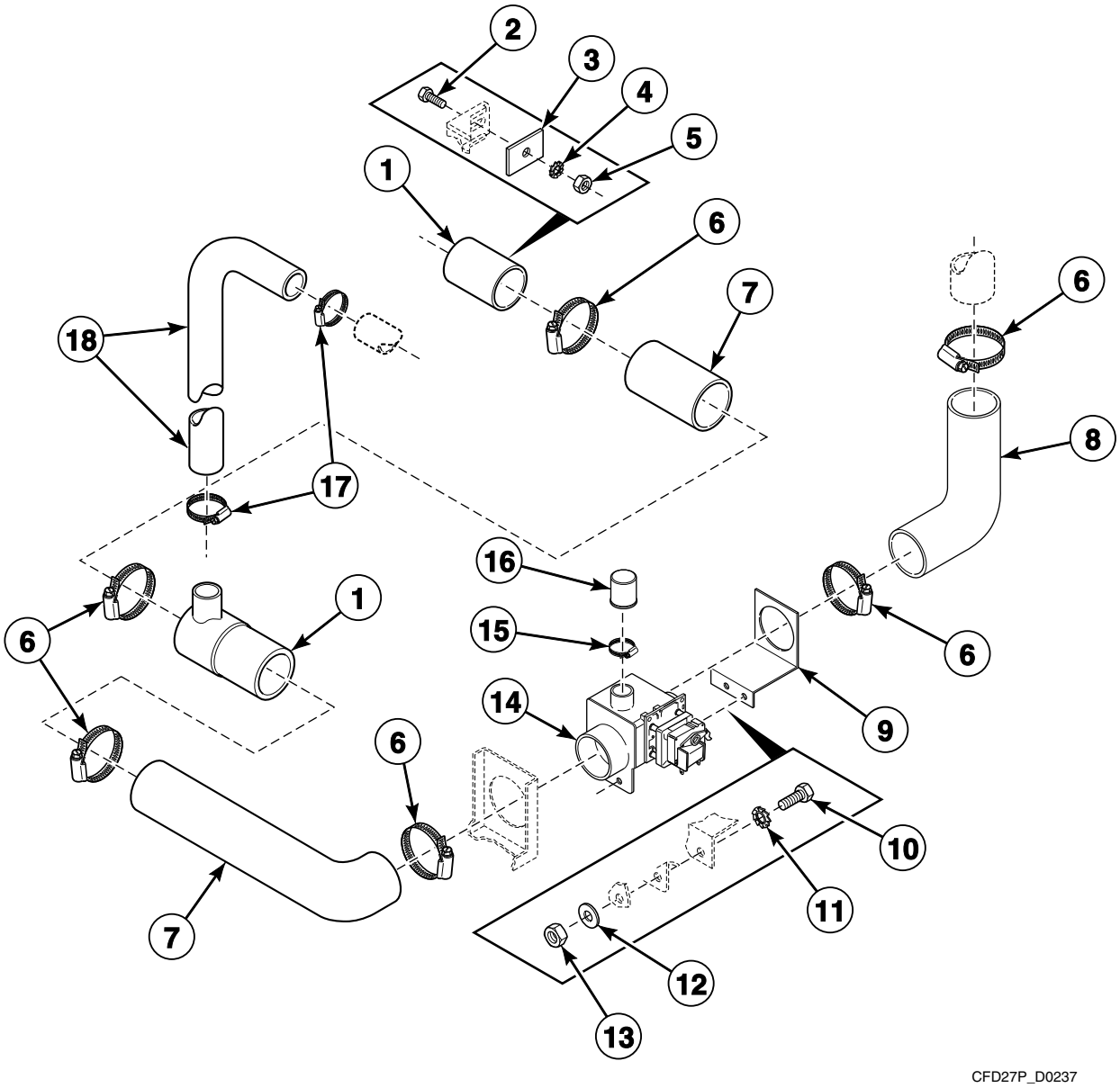

© Copyright, Alliance Laundry Systems LLC – DO NOT COPY or TRANSMIT

Single Drain Assembly - *75 and *304 Models

REF	PART NO.	DESCRIPTION	COMMENTS
1	223/00106/00	Drain Pipe	
2	205/00103/00	Bolt	
3	101/00007/00	Outlet Pipe Plate Assembly	
4	203/00004/00	Washer	
5	204/00106/00	Nut	
6	223/00071/00	Hose Clamp	
7	223/00141/00	Drain Valve to Drain Pipe Hose	
8	223/00133/00	Drain Tub to Drain Valve Hose	
9	114/00010/00	Drain Valve Plate Assembly	
10	206/00009/00	Bolt	
11	203/00003/00	Washer	
12	202/00002/00	Washer	
13	204/00004/00	Nut	
14	209/00075/00	Drain Valve	240 Volt/50 or 60 Hertz; NO
	209/00171/00	Drain Valve	240 Volt/50 or 60 Hertz; NC
15	223/00012/00	Hose Clamp	
16	223/00086/00	Drain Valve Overflow Plug	
17	223/00013/00	Hose Clamp	
18	223/00131/00	Overflow Hose	

© Copyright, Alliance Laundry Systems LLC – DO NOT COPY or TRANSMIT

Dual Drain Assembly - *75 and *304 Models

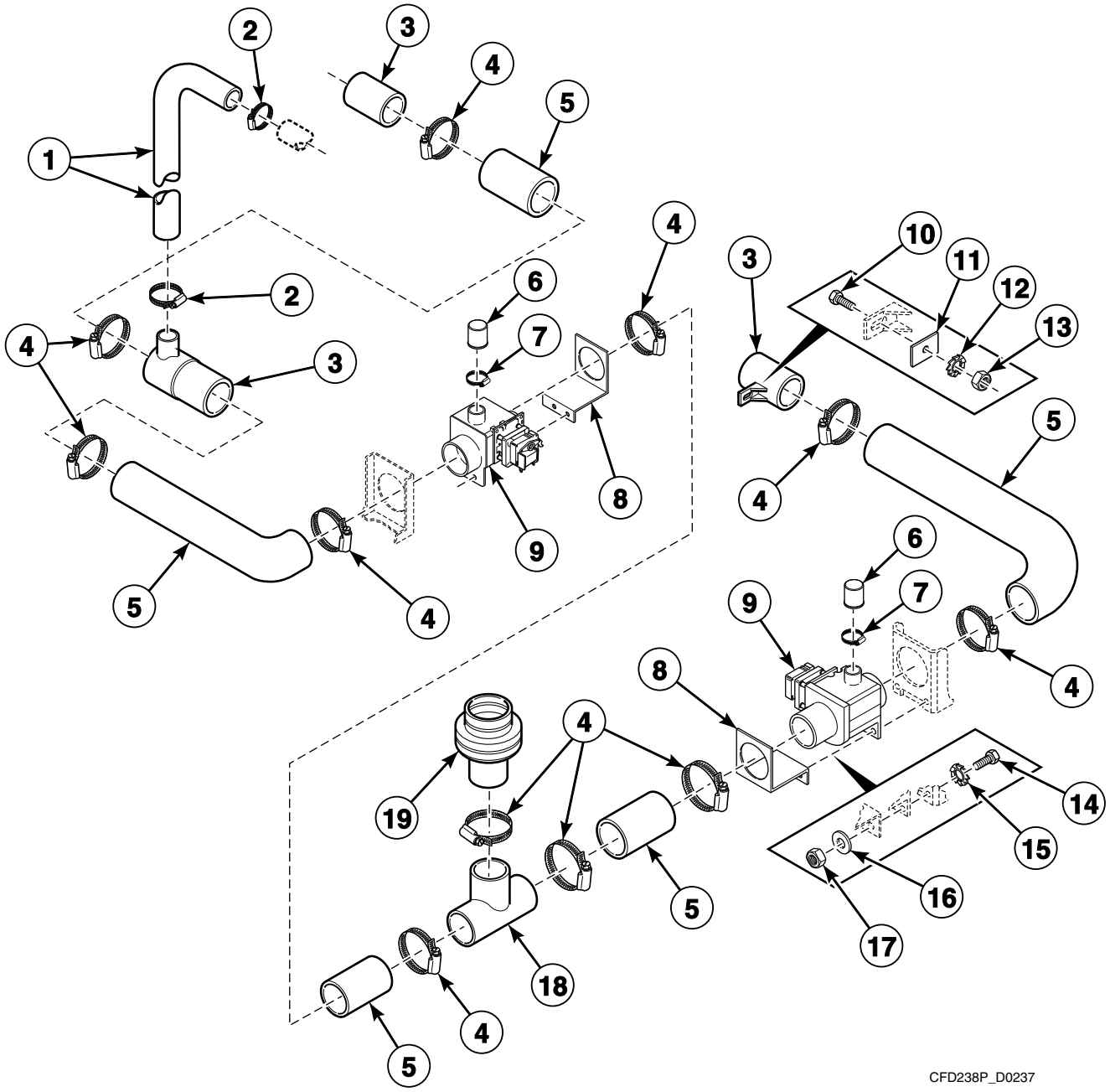

© Copyright, Alliance Laundry Systems LLC – DO NOT COPY or TRANSMIT

Dual Drain Assembly - *75 and *304 Models

REF	PART NO.	DESCRIPTION	COMMENTS
1	223/00131/00	Overflow Hose	
2	223/00013/00	Hose Clamp	
3	223/00106/00	Drain Pipe	
4	223/00071/00	Hose Clamp	
5	223/00141/00	Drain Valve to Drain Pipe Hose	
6	223/00086/00	Drain Valve Overflow Plug	
7	223/00012/00	Hose Clamp	
8	114/00010/00	Drain Valve Plate Assembly	
9	209/00075/00	Drain Valve	
10	205/00103/00	Bolt	
11	101/00007/00	Outlet Pipe Plate Assembly	
12	203/00004/00	Washer	
13	204/00106/00	Nut	
14	206/00009/00	Bolt	
15	203/00003/00	Washer	
16	202/00002/00	Washer	
17	204/00004/00	Nut	
18	253/00006/00	T-Piece	
19	223/00170/00	Exhaust Valve Hose	

© Copyright, Alliance Laundry Systems LLC – DO NOT COPY or TRANSMIT

Door Lock

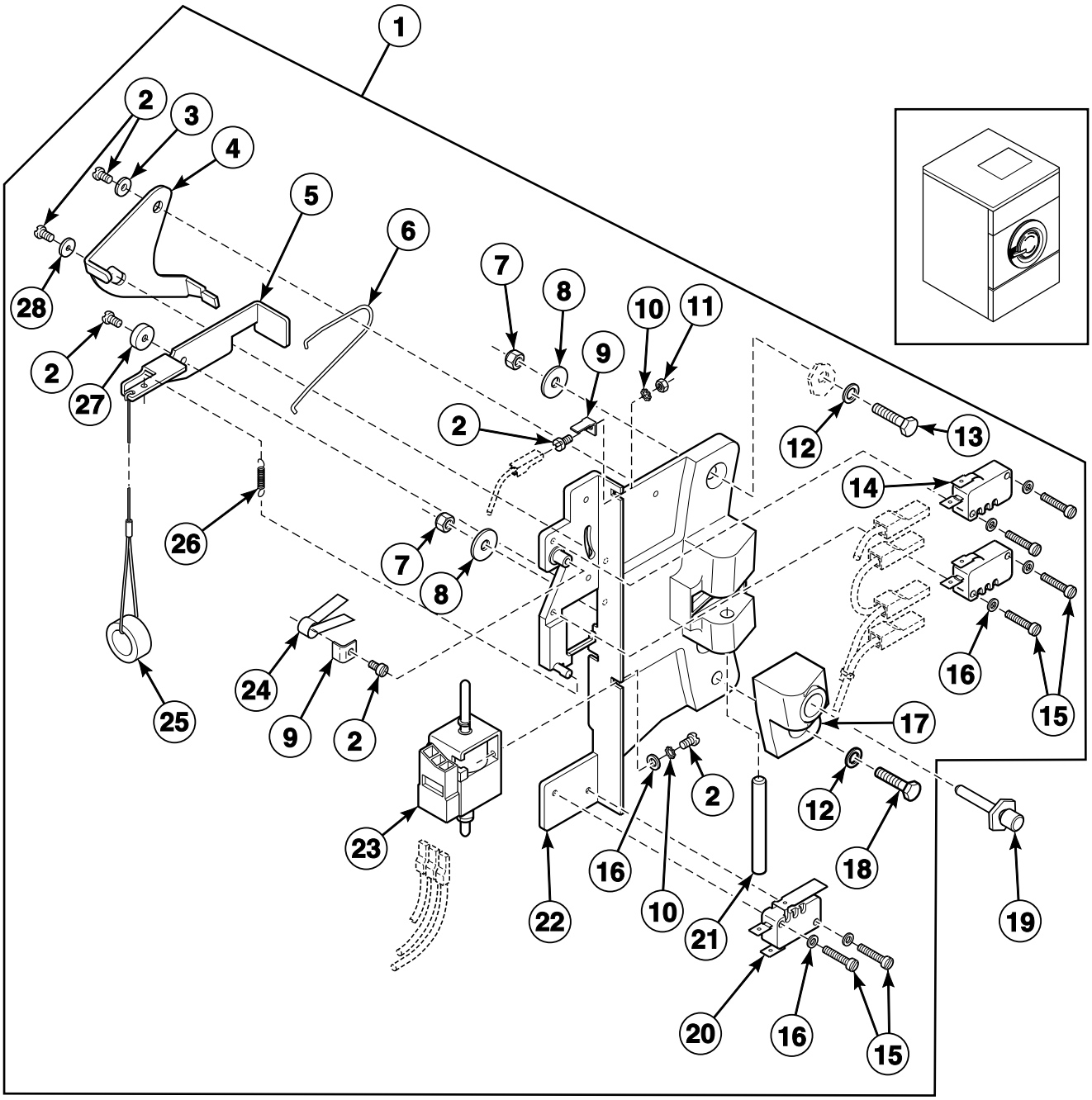

CFD543P_D0237

© Copyright, Alliance Laundry Systems LLC – DO NOT COPY or TRANSMIT

Door Lock

REF	PART NO.	DESCRIPTION	COMMENTS
1	217/00052/00A	Door Lock Assembly	
2	207/00135/00	Screw	
3	201/00017/00	Washer	
4	217/00052/05	Switch Lever	
5	217/00052/04	Interlock Lever	
6	224/00040/00	Lever Spring	
7	204/00009/00	Nut	
8	201/00006/00	Washer	
9	210/10015/00	Ground Terminal	
10	203/00007/00	Washer	
11	204/00008/00	Nut	
12	202/00101/00	Washer	
13	205/00103/00	Bolt	
14	209/00272/00	Door Lock Microswitch	
15	207/00009/00	Screw	
16	201/00018/00	Washer	
17	217/00052/11	Door Lock Bracket	
18	205/00115/00	Bolt	
19	211/00109/02	Door Lock Pin Kit	
20	209/00273/00	Light Microswitch	
21	217/00017/03	Lock Shaft	
22	217/00052/01A	Door Lock Assembly	
23	209/00703/50	Door Solenoid	
24	224/00049/00	Door Lock Spring	
25	217/00052/07	Door Release Wire	
26	224/00043/00	Interlock Coil Spring	
27	217/00052/03	Door Lock Spacer	
28	202/00124/00	Washer	

© Copyright, Alliance Laundry Systems LLC – DO NOT COPY or TRANSMIT

Door

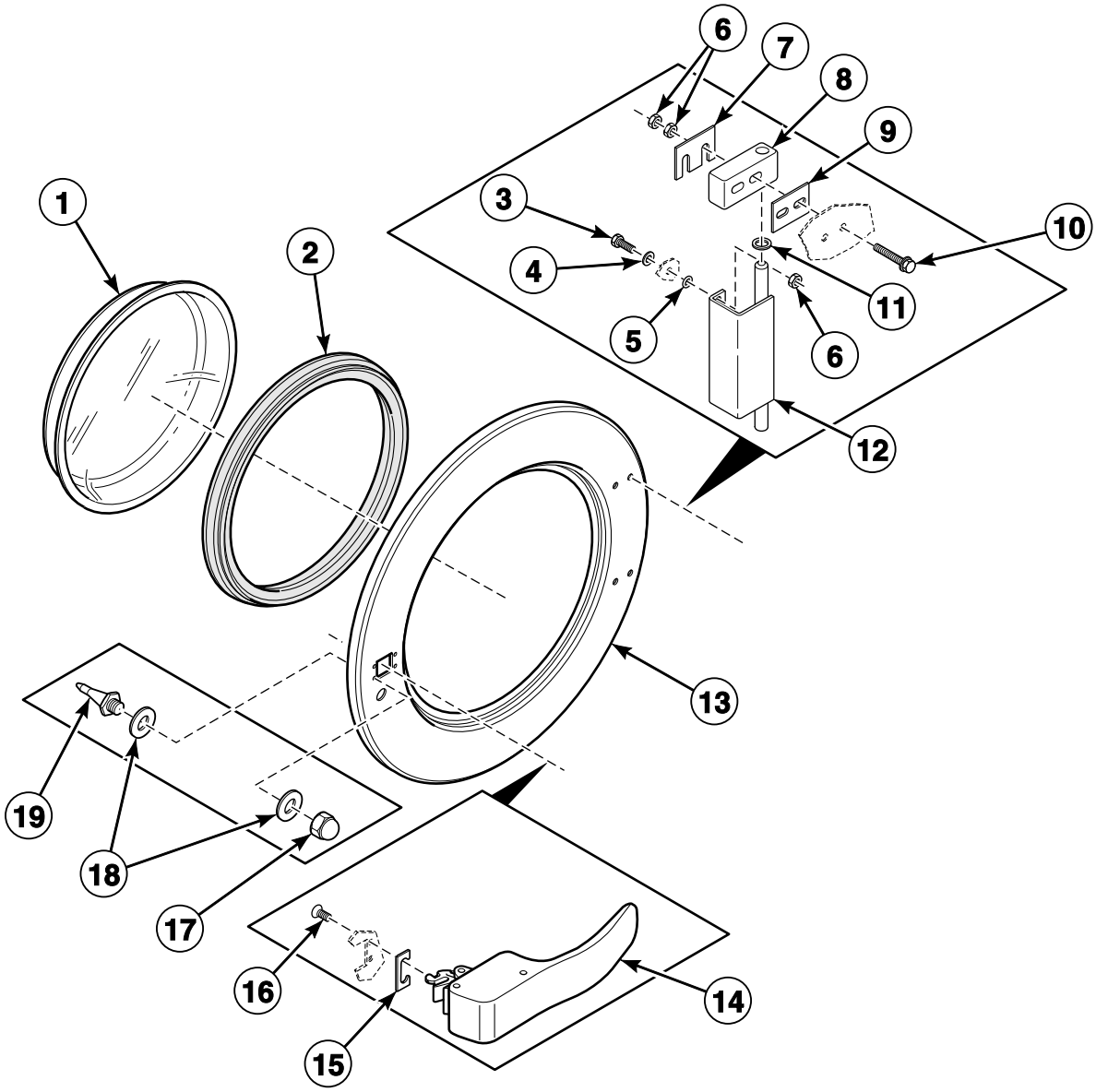

CFD239P_D0237

© Copyright, Alliance Laundry Systems LLC – DO NOT COPY or TRANSMIT

Door

REF	PART NO.	DESCRIPTION	COMMENTS
1	B12449801	Door Glass	
2	223/00068/00	Door Glass Seal	
3	205/00104/00	Bolt	
4	202/00101/00	Washer	
5	217/00021/00	O-Ring	
6	204/00106/00	Nut	
7	111/00003/00	Door Hinge Plate Assembly	
8	253/00022/00	Door Hinge Block	
9	118/00122/00	Door Hinge Spacer	1.5 mm
	118/00124/00	Door Hinge Spacer	2 mm
10	207/00126/00	Screw	
11	202/00104/00	Washer	
12	221/00004/00	Hinge	Fixed part
13	118/00125/00	Door	
14	217/00059/00	Door Handle	
15	217/00016/00	Door Handle Stop	
16	B12500801	Screw	
17	204/00103/00	Nut	
18	202/00111/00	Washer	
19	211/00109/01	Door Lock Pin Kit	

© Copyright, Alliance Laundry Systems LLC – DO NOT COPY or TRANSMIT

Control Panel - Cygnus Professional OPL Models

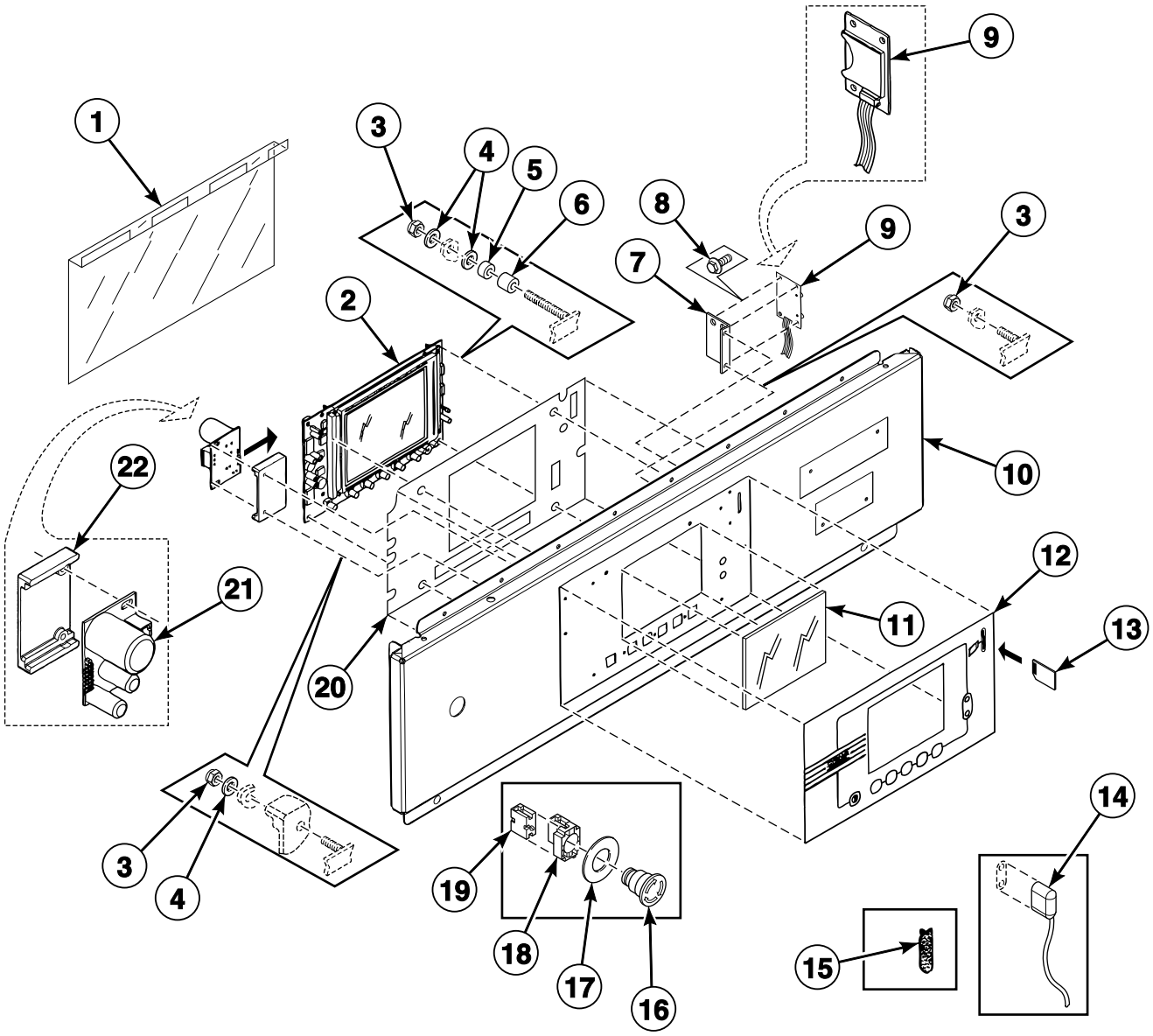

© Copyright, Alliance Laundry Systems LLC – DO NOT COPY or TRANSMIT

Control Panel - Cygnus Professional OPL Models

REF	PART NO.	DESCRIPTION	COMMENTS
1	229/00289/00	Circuit Board Cover	
2	209/02002/00	Display PC-Board	
3	204/00116/00	Nut	
4	223/00123/00	Washer	
5	211/00128/00	Printboard Separator	
6	211/00122/00	Standoff	
7	111/01893/00	Printboard Support Card	
8	211/00145/00	Standoff	
9	209/02013/00	Memory Card PC-Board	
	B12538301	Data Card Ribbon Assembly	
10	150/01812/00	Upper Front Panel	
11	225/00321/00	Plexi Frame	
12	225/10313/00	Operating Sticker	
	225/10426/00	Operating Sticker	
13	209/02022/00	Datacard	
14	210/00902/00	Infrared Cable	
15	223/00348/00	Datacard Cover	
16	209/00099/20	Emergency Switch Pushbutton	
17	209/00520/00	Telem Sticker	
18	44018901	Contact Block	
19	229/00268/00	Insulating Sticker	
20	209/02010/00	Door Lock PC-Board	
21	223/00374/00	Mounting Plate	

© Copyright, Alliance Laundry Systems LLC – DO NOT COPY or TRANSMIT

Control Panel - Cygnus Premium OPL Models

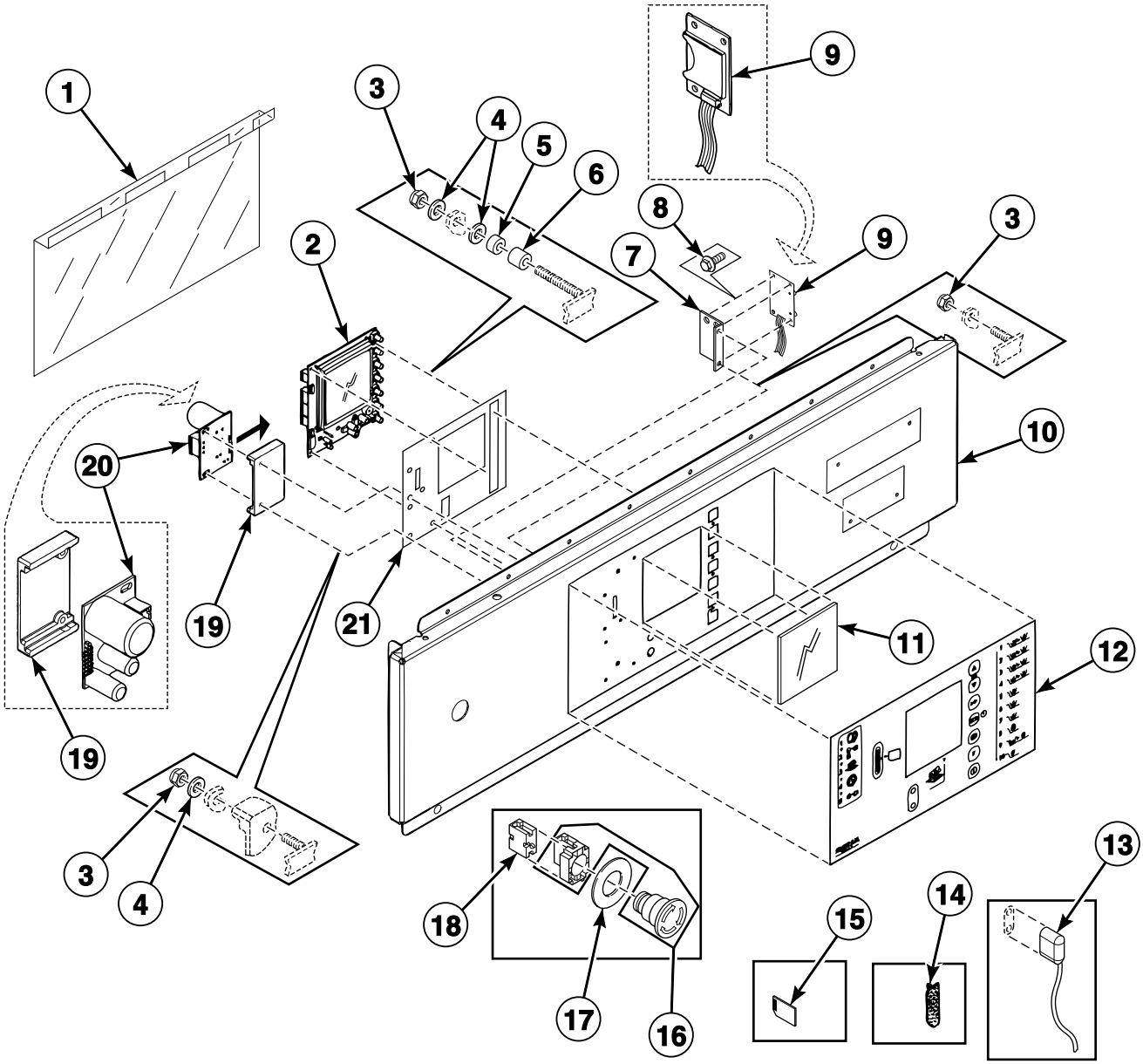

BE000886P_D0237

© Copyright, Alliance Laundry Systems LLC – DO NOT COPY or TRANSMIT

Control Panel - Cygnus Premium OPL Models

REF	PART NO.	DESCRIPTION	COMMENTS
1	229/00289/00	Circuit Board Cover	
2	209/02015/02	Printboard	Cygnus premium
3	204/00116/00	Nut	
4	223/00123/00	Washer	
5	211/00128/00	Printboard Separator	
6	211/00122/00	Standoff	
7	111/01893/00	Printboard Support Card	
8	211/00145/00	Standoff	
9	209/02013/00	Memory Card PC-Board	
	B12538301	Data Card Ribbon Assembly	
10	111/01910/00	Upper Front Panel	
11	225/00323/00	Plexi Frame	
12	225/10404/00	Operating Sticker	Cygnus premium OPL with dataflash memory card
	225/10405/00	Operating Sticker	Cygnus premium central panel and start
	225/10427/00	Operating Sticker	Cygnus premium OPL with dataflash memory card inside
13	210/00902/00	Infrared Cable	
14	223/00348/00	Datacard Cover	
15	209/02022/00	Datacard	
16	209/00099/20	Emergency Switch Pushbutton	
17	209/00520/00	Telem Sticker	
18	44018901	Contact Block	
19	223/00374/00	Mounting Plate	
20	209/02010/00	Door Lock PC-Board	
21	229/00291/00	Insulating Sticker	

© Copyright, Alliance Laundry Systems LLC – DO NOT COPY or TRANSMIT

Control Panel - Cygnus Premium Coin Models

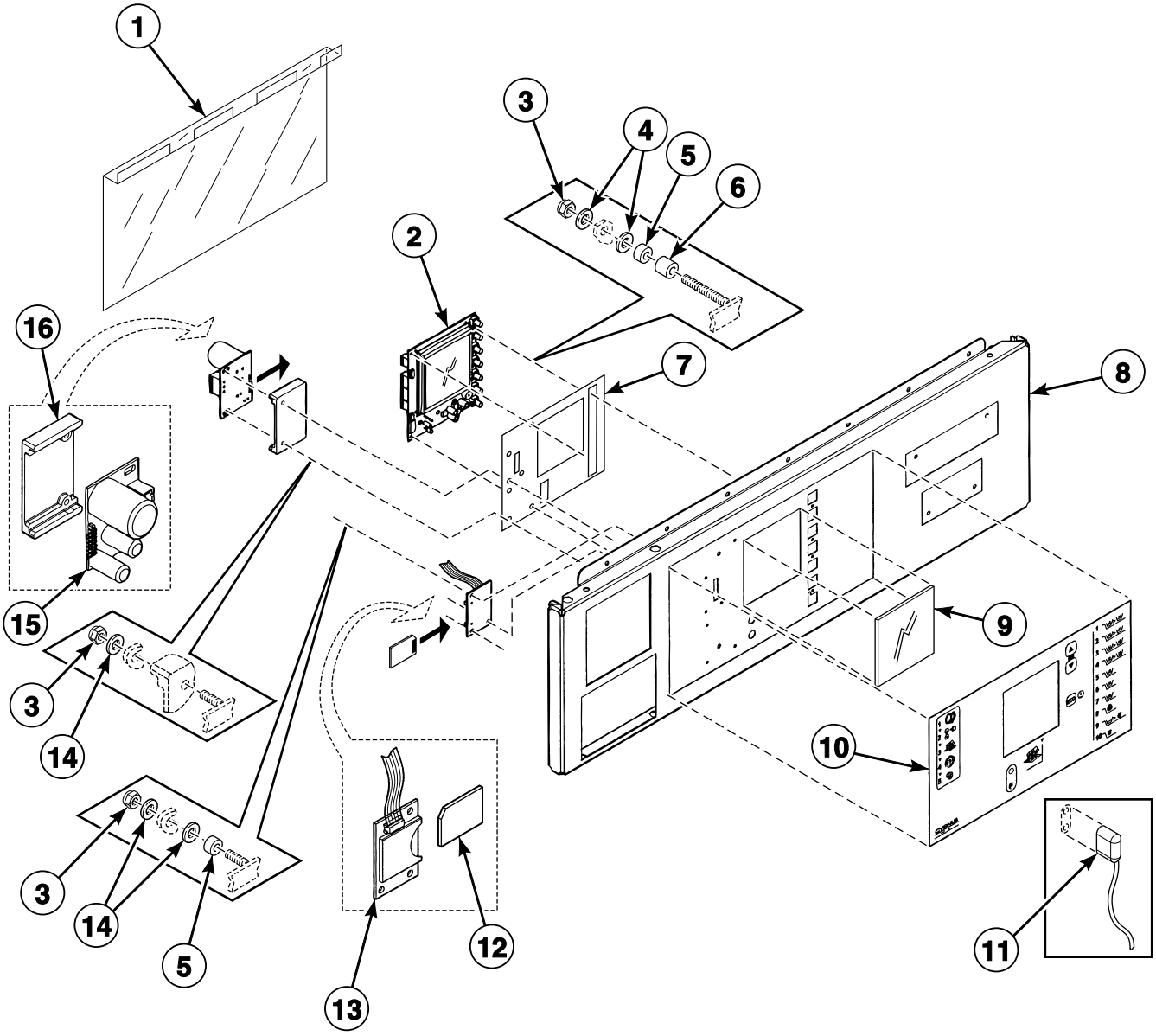

BE000872AP_D0237

© Copyright, Alliance Laundry Systems LLC – DO NOT COPY or TRANSMIT

Control Panel - Cygnus Premium Coin Models

REF	PART NO.	DESCRIPTION	COMMENTS
1	229/00289/00	Circuit Board Cover	
2	209/02015/02	Printboard	Cygnus premium
3	204/00116/00	Nut	
4	223/00123/00	Washer	
5	211/00128/00	Printboard Separator	
6	211/00122/00	Standoff	
7	229/00291/00	Insulating Sticker	
8	111/01911/00	Upper Front Panel	
9	225/00323/00	Plexi Frame	
10	225/10403/00	Operating Sticker	
11	210/00901/00	Optic Cable	
12	209/02022/00	Datacard	
13	209/02013/00	Memory Card PC-Board	
	B12538301	Data Card Ribbon Assembly	
14	209/02010/00	Door Lock PC-Board	
15	223/00374/00	Mounting Plate	

© Copyright, Alliance Laundry Systems LLC – DO NOT COPY or TRANSMIT

Control Panel - Cygnus Standard/Commercial OPL Models

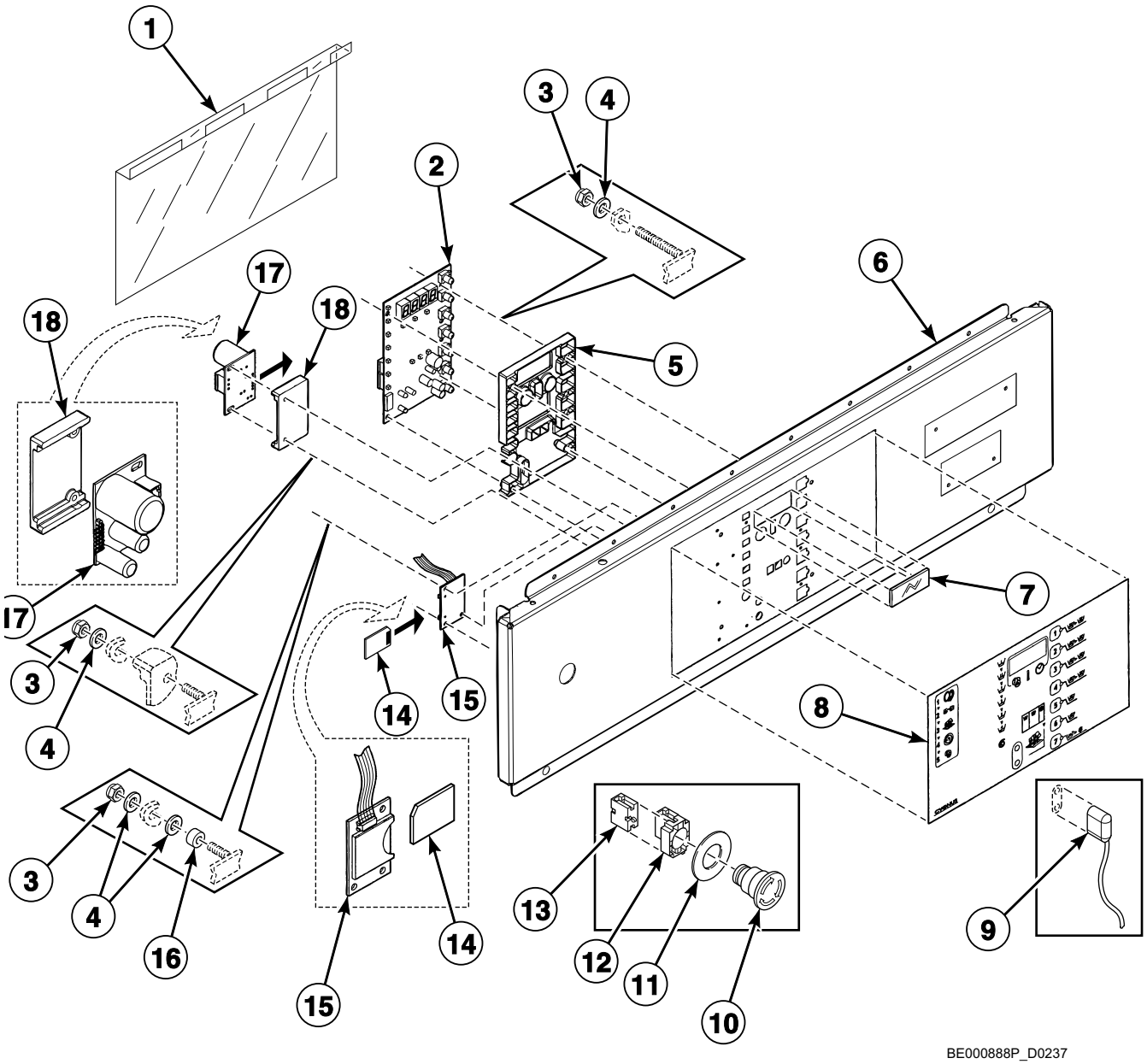

© Copyright, Alliance Laundry Systems LLC – DO NOT COPY or TRANSMIT

Control Panel - Cygnus Standard/Commercial OPL Models

REF	PART NO.	DESCRIPTION	COMMENTS
1	229/00289/00	Circuit Board Cover	
2	209/02001/02	Printboard	
3	204/00116/00	Nut	
4	223/00123/00	Washer	
5	223/00330/00	Protection LED	
6	111/01908/00	Upper Front Panel	
7	225/00322/00	Plexi Frame	
8	225/10307/00	Operating Sticker	Models HF234_CYGNUS-STANDARD_OPL and HF304_CYGNUS-STANDARD_OPL
	225/10308/00	Operating Sticker	Models HF234_CYGNUS-COMM_OPL and HF304_CYGNUS-COMM_OPL
9	210/00901/00	Optic Cable	
10	44018801	Pushbutton	
11	209/00520/00	Telem Sticker	
12	209/00099/20	Emergency Switch Pushbutton	
13	44018901	Contact Block	
14	209/02022/00	Datacard	
15	209/02013/00	Memory Card PC-Board	
	B12538301	Data Card Ribbon Assembly	
16	211/00128/00	Printboard Separator	
17	209/02010/00	Door Lock PC-Board	
18	223/00374/00	Mounting Plate	

© Copyright, Alliance Laundry Systems LLC – DO NOT COPY or TRANSMIT

Control Panel - Cygnus Standard/Commercial Coin Models

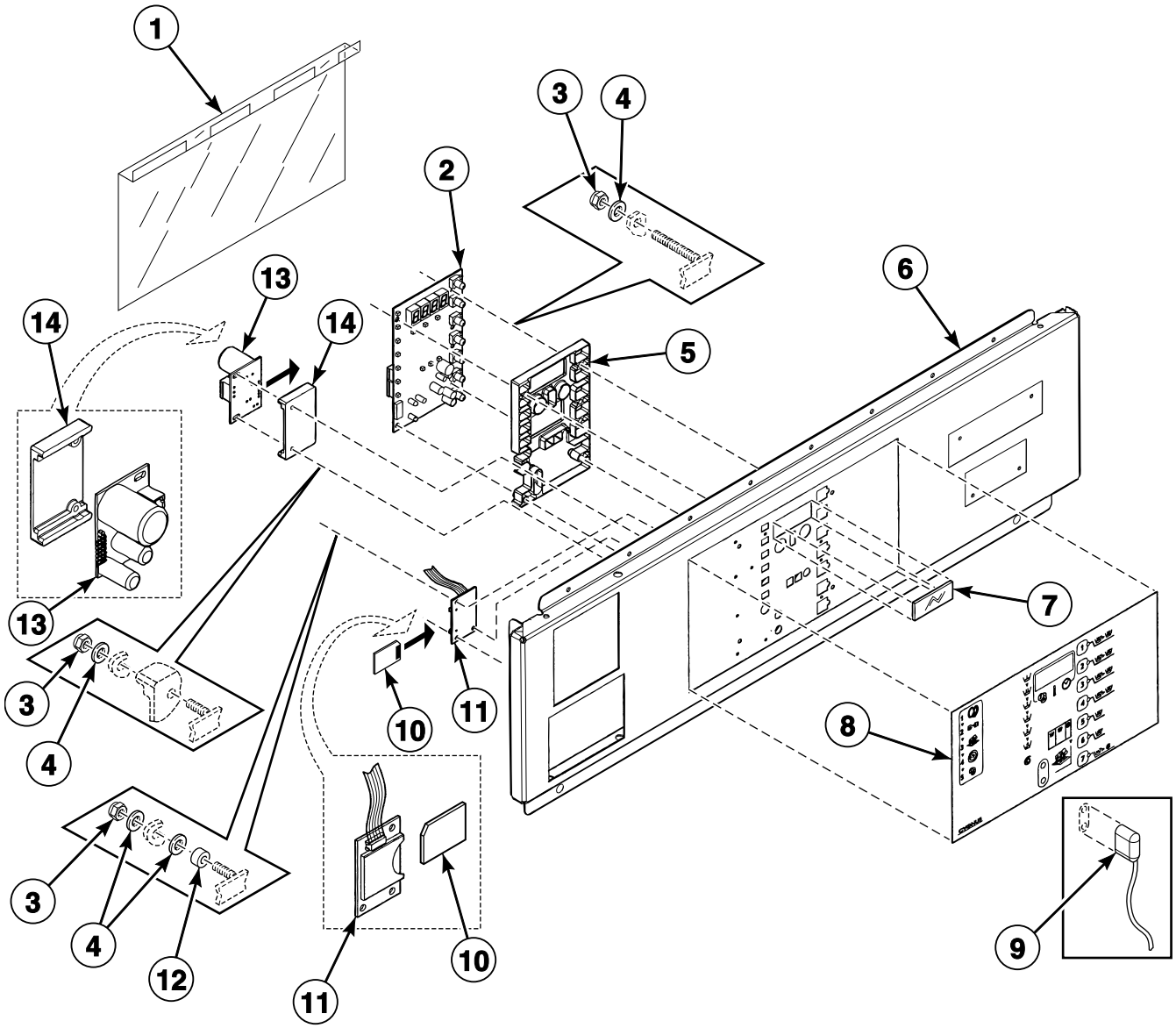

BE000889P_D0237

© Copyright, Alliance Laundry Systems LLC – DO NOT COPY or TRANSMIT

Control Panel - Cygnus Standard/Commercial Coin Models

REF	PART NO.	DESCRIPTION	COMMENTS
1	229/00289/00	Circuit Board Cover	
2	209/02001/02	Printboard	
3	204/00116/00	Nut	
4	223/00123/00	Washer	
5	223/00330/00	Protection LED	
6	111/01909/00	Upper Front Panel	
7	225/00322/00	Plexi Frame	
8	225/10305/00	Operating Sticker	Models HF234_CYGNUS-STANDARD_COIN and HF304_CYGNUS-STANDARD_COIN
	225/10306/00	Operating Sticker	Models HF234_CYGNUS-COMM_COIN and HF304_CYGNUS-COMM_COIN
9	210/00901/00	Optic Cable	
10	209/02022/00	Datacard	
11	209/02013/00	Memory Card PC-Board	
	B12538301	Data Card Ribbon Assembly	
12	211/00128/00	Printboard Separator	
13	209/02010/00	Door Lock PC-Board	
14	223/00374/00	Mounting Plate	

© Copyright, Alliance Laundry Systems LLC – DO NOT COPY or TRANSMIT

Control Panel - Micro-20

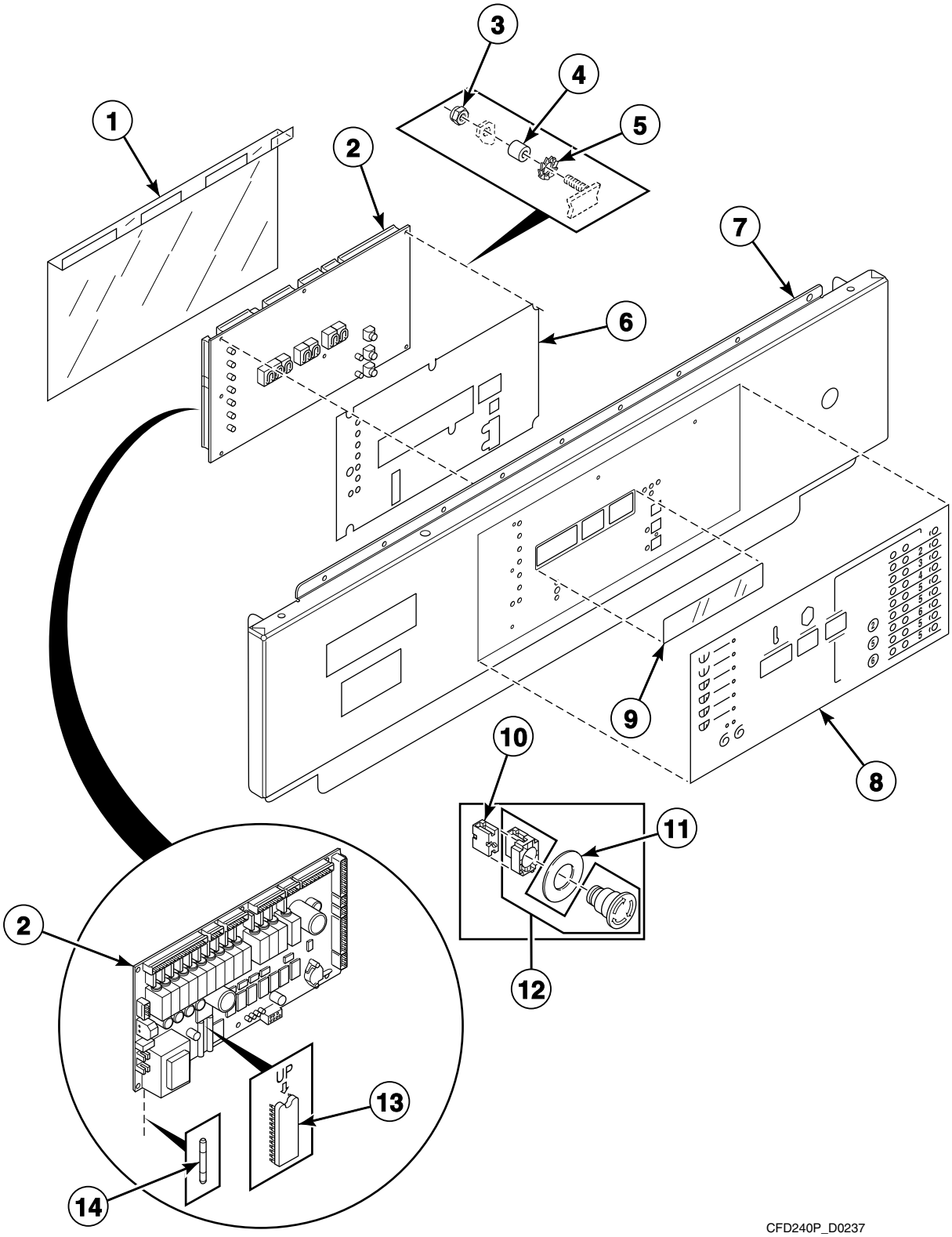

© Copyright, Alliance Laundry Systems LLC – DO NOT COPY or TRANSMIT

Control Panel - Micro-20

REF	PART NO.	DESCRIPTION	COMMENTS
1	229/00262/00	Circuit Board Cover	
2	209/00440/00	Printboard	
3	204/00116/00	Nut	
4	211/00122/00	Standoff	
5	203/00006/00	Washer	
6	229/00255/00	Insulating Sticker	
7	111/01706/00	Upper Front Panel	Models CHF055MNH, CHF234MNH, HF176_MICRO-20_COIN, HF176_MICRO-20_OPL, HF234_MICRO-20_COIN, HF234_MICRO-20_OPL, IHF055MNH and IHF234MNH
	111/01712/00	Upper Front Panel	Models CHF075MNH, CHF304MNH, HF304_MICRO-20_COIN, HF304_MICRO-20_OPL, IHF075MNH and IHF304MNH
8	225/00408/00	Operating Sticker	No-ECO and no-TEMP
	225/00407/00	Keypad Sticker	Neutral Micro 20 OPL
9	225/00316/00	Plexi Frame	
10	44018901	Contact Block	
11	209/00520/00	Telem Sticker	
12	44018801	Pushbutton	
13	209/00266/01	Eprom	
14	209/00439/00	Fuse	

© Copyright, Alliance Laundry Systems LLC – DO NOT COPY or TRANSMIT

Control Panel - Sigma

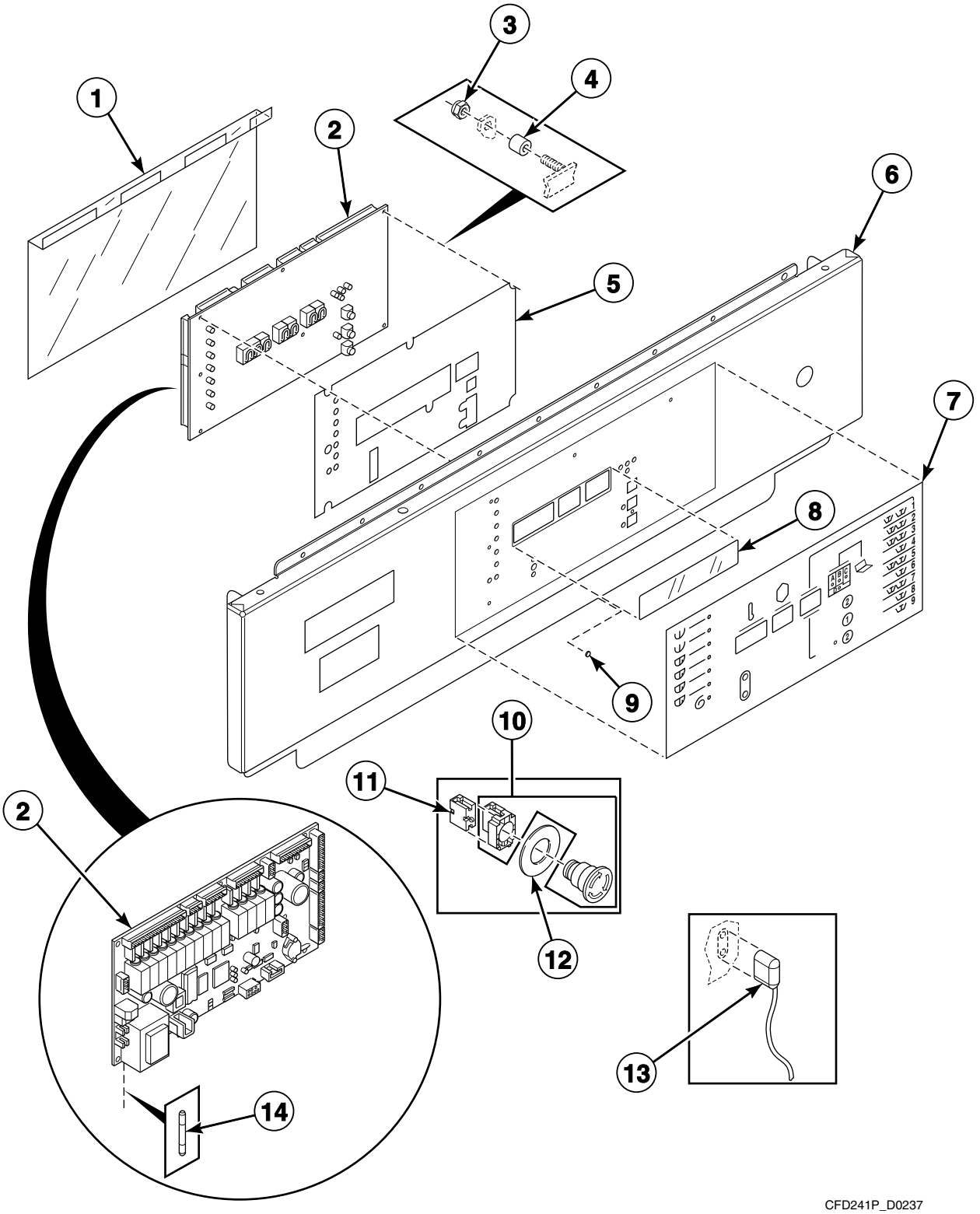

© Copyright, Alliance Laundry Systems LLC – DO NOT COPY or TRANSMIT

Control Panel - Sigma

REF	PART NO.	DESCRIPTION	COMMENTS
1	229/00262/00	Circuit Board Cover	
2	209/00547/00	Control Board	
3	204/00114/00	Nut	
4	211/00122/00	Standoff	
5	229/00255/00	Insulating Sticker	
6	111/01706/00	Upper Front Panel	Models HF176_SIGMA_COIN, HF176_SIGMA_OPL, HF234_SIGMA_COIN and HF234_SIGMA_OPL
	111/01712/00	Upper Front Panel	Models HF304_SIGMA_COIN and HF304_SIGMA_OPL
7	225/00404/00	Operating Sticker	Neutral Sigma OPL
	225/00405/00	Operating Sticker	Central panel operation Sigma no-TEMP and ECO
8	225/00316/00	Plexi Frame	
9	202/00120/00	Metal Disc	
10	44018801	Pushbutton	
11	44018901	Contact Block	
12	209/00520/00	Telem Sticker	
13	210/00902/00	Infrared Cable	
14	209/00439/00	Fuse	

© Copyright, Alliance Laundry Systems LLC – DO NOT COPY or TRANSMIT

Control Panel - PS40F

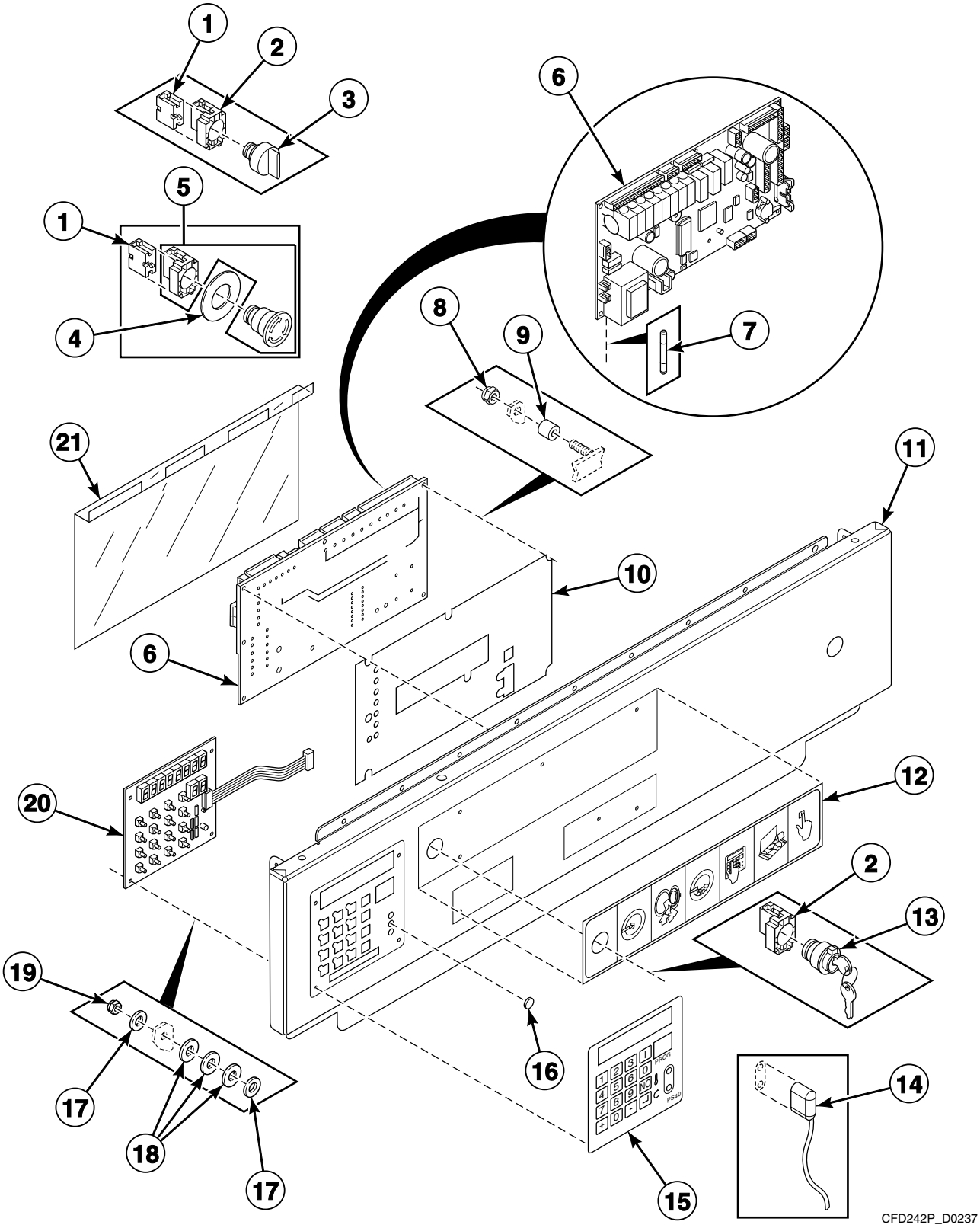

© Copyright, Alliance Laundry Systems LLC – DO NOT COPY or TRANSMIT

Control Panel - PS40F

REF	PART NO.	DESCRIPTION	COMMENTS
1	44018901	Contact Block	
2	209/00099/25	Switch Base	
3	209/00099/29	Switch Knob	
4	209/00520/00	Telem Sticker	
5	44018801	Pushbutton	
6	B12351701	Main Board	
7	209/00372/01	Fuse	
8	204/00116/00	Nut	
9	211/00122/00	Standoff	
10	229/00255/00	Insulating Sticker	
11	111/01708/00	Front Panel	Models CHF055ANH, CHF234ANH, HF176_PS40F, HF234_PS40F, IHF055ANH and IHF234ANH
	111/01714/00	Upper Front Panel	Models CHF075ANH, CHF304ANH, HF304_PS40F, IHF075ANH and IHF304ANH
12	225/00400/00	Operating Sticker	
13	209/00326/20	Programming Key Contact Switch	With key
14	210/00902/00	Infrared Cable	
15	225/00397/00	Label	
16	202/00120/00	Metal Disc	
17	223/00123/00	Washer	
18	N/A	Washer	
19	204/00116/00	Nut	
20	209/00552/01	Keypad	
21	229/00262/00	Circuit Board Cover	

N/A = Part no longer available

© Copyright, Alliance Laundry Systems LLC – DO NOT COPY or TRANSMIT

Control Panel - PC30

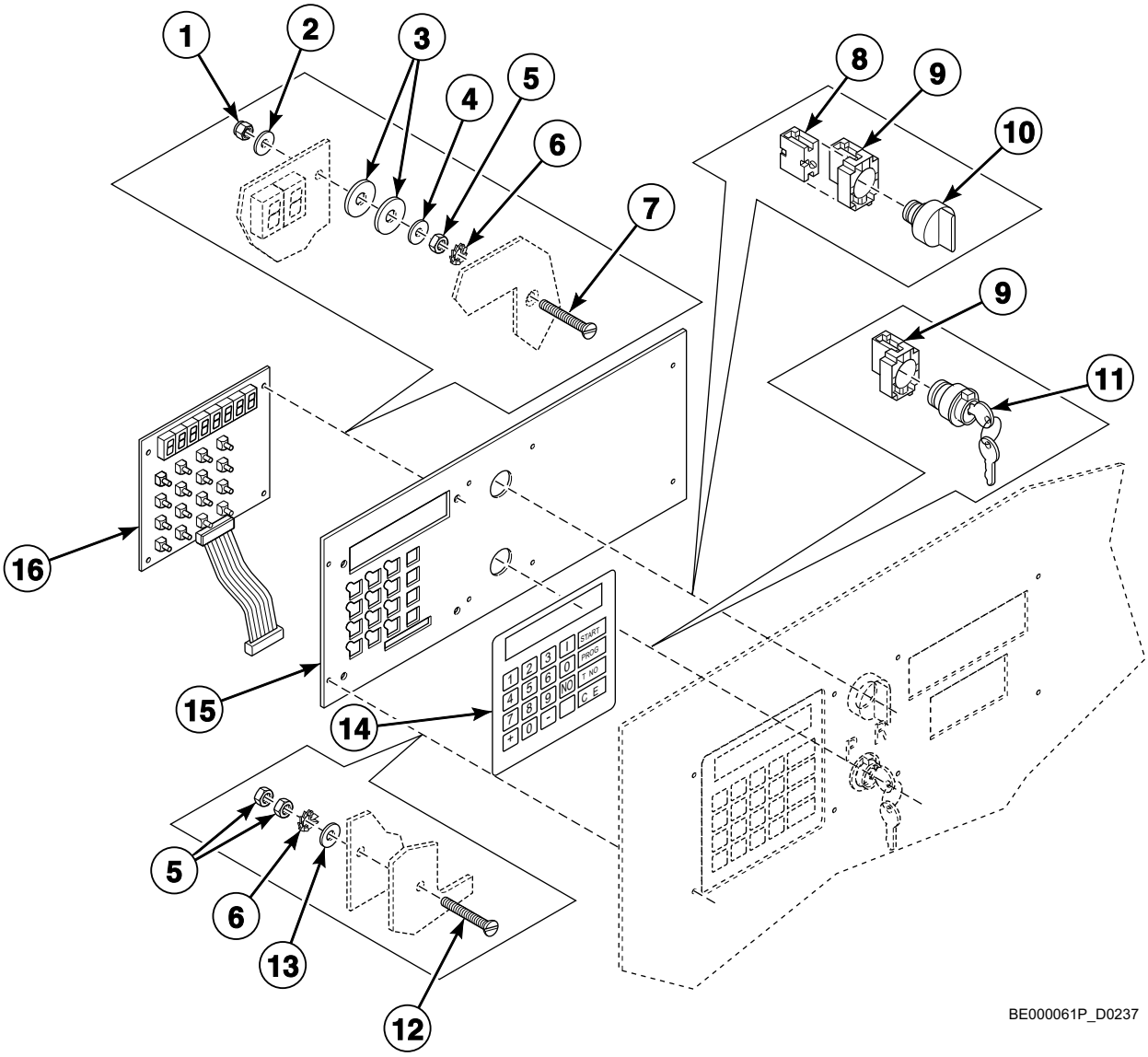

© Copyright, Alliance Laundry Systems LLC – DO NOT COPY or TRANSMIT

Control Panel - PC30

REF	PART NO.	DESCRIPTION	COMMENTS
1	204/00116/00	Nut	
2	223/00123/00	Washer	
3	223/00051/10	Washer	
4	201/00008/00	Washer	
5	204/00008/00	Nut	
6	203/00007/00	Washer	
7	207/00025/00	Screw	
8	209/00099/06	Contact Switch	
9	209/00099/05	Contact	
10	209/00099/09	Button	
11	938P3	Programming Key Kit	
12	207/00108/00	Screw	
13	202/00004/00	Washer	
14	229/00245/00	Label	
15	173/00012/00	Mounting Plate	
16	209/00323/01	Keyboard	

© Copyright, Alliance Laundry Systems LLC – DO NOT COPY or TRANSMIT

Coin Meter - Coin Models

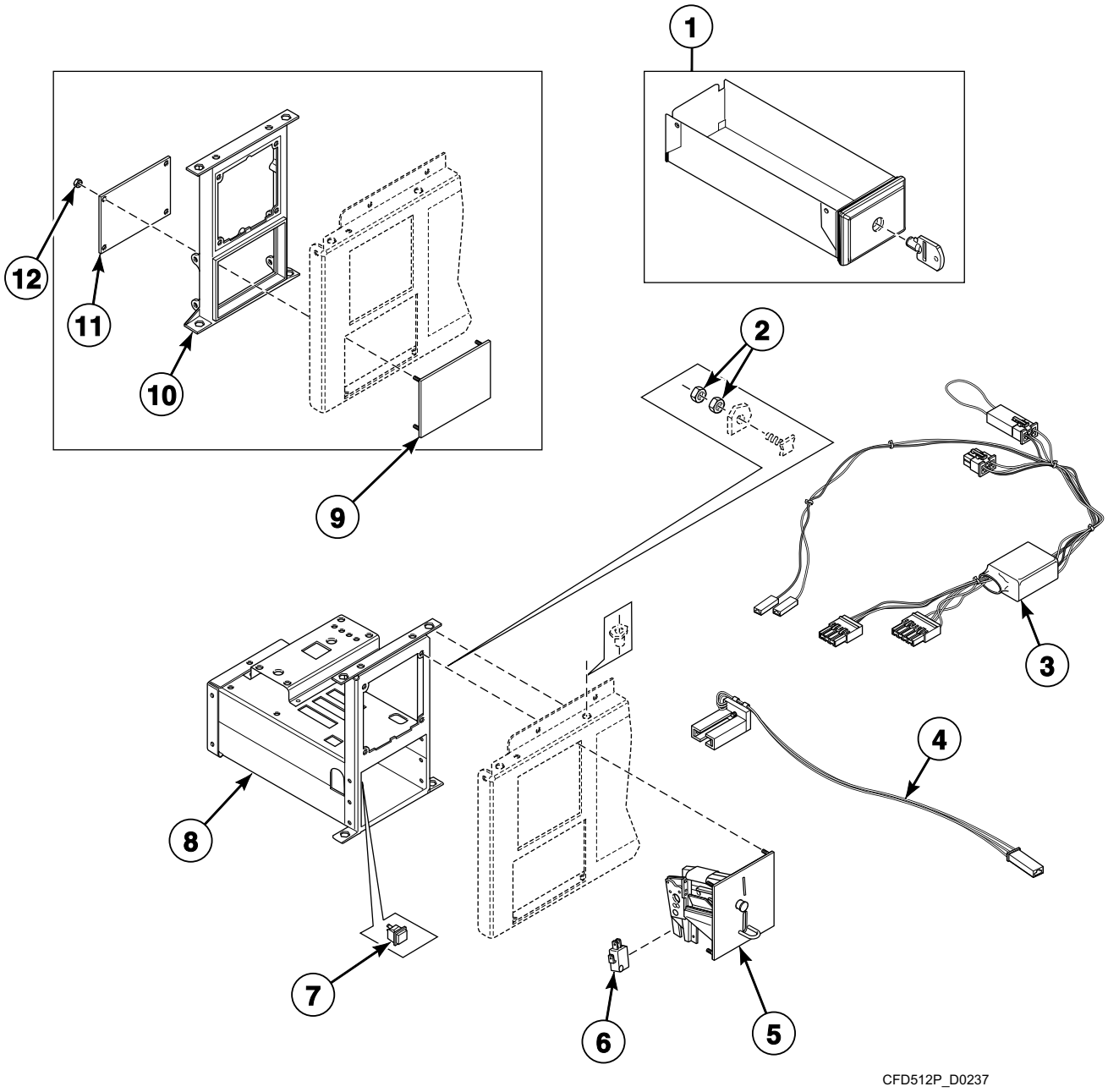

© Copyright, Alliance Laundry Systems LLC – DO NOT COPY or TRANSMIT

Coin Meter - Coin Models

REF	PART NO.	DESCRIPTION	COMMENTS
	B12388101	Single Drop Optical Sensor Kit	Includes items 3 and 4
	B12388102	Dual Drop Optical Sensor Kit	Includes items 3 and 4
1	254/00077/00	Coin Box	
	254/00077/02	Key	
2	204/00008/00	Nut	
3	B12359901	Wire Assembly	Micro-20 and Sigma models
4	209/00781/00	Optical Switch	Micro-20 and Sigma models
5	B12311224	Coin Drop	Mechanical; Jeton 5K
	B12311206	Coin Drop	Mechanical; Jeton 7K
	B12311201	Coin Drop	Mechanical; Jeton 10K
	B12311210	Coin Drop	Mechanical; Jeton 12K
	B12311252	Coin Drop	Mechanical; Jeton 10K and .5 euro
	B12311211	Coin Drop	Mechanical; Jeton 7K and 1 euro
	B12323901	Coin Drop	Mechanical; Jeton 15K and 7K
	B12311204	Coin Drop	Mechanical; Jeton gettone
	B12311234	Coin Drop	Mechanical; Jeton crouzet
	B12311247	Coin Drop	Mechanical; Jeton 118-1
	B12311248	Coin Drop	Mechanical; Jeton 118-5
	B12311222	Coin Drop	Mechanical; 1 euro
	B12311214	Coin Drop	Mechanical; .5 euro
	B12311202	Coin Drop	Mechanical; .5 and 1 euro
	B12311239	Coin Drop	Mechanical; .5 and 2 euro
	B12311205	Coin Drop	Mechanical; .2 and 1 euro
	B11211209	Coin Drop	Mechanical; .2 and .5 euro
	B12311218	Coin Drop	Mechanical; 1 and 1 euro
	B12311219	Coin Drop	Mechanical; 1 and 2 euro
	B12311203	Coin Drop	Mechanical; 1 and 2 frank
	B12311207	Coin Drop	Mechanical; 1 Deense kroon
	B12311225	Coin Drop	Mechanical; 10 Deense kronen
	B12311235	Coin Drop	Mechanical; 10 Tsjechische kronen
	B12311244	Coin Drop	Mechanical; 10 Noorse kronen
	B12311208	Coin Drop	Mechanical; 100 and 500 yen
	B12311212	Coin Drop	Mechanical; 15K
	B12311215	Coin Drop	Mechanical; 1 kro
	B12311226	Coin Drop	Mechanical; Australia 1.00
	B12311216	Coin Drop	Mechanical; Australia .2 and 1.00
	B12311220	Coin Drop	Mechanical; New Zealand 1.00
	B12311221	Coin Drop	Mechanical; .5 and 2 zwitsers
	B12311241	Coin Drop	Mechanical; Hong Kong 1.00
	B12311249	Coin Drop	Mechanical; Hong Kong 5.00
	B12311301	Coin Drop	Mechanical; U.S. $0.25
	B12311302	Coin Drop	Mechanical; U.S. $0.25 and $1.00
	B12311304	Coin Drop	Mechanical; Canada 1.00 and .25
	B12323401	Coin Drop	Mechanical; Singapore 1.00
6	209/00600/01P	Switch	
7	209/00396/00	Pushbutton	
8	152/00112/00	Mechanical Coin Meter Housing	
9	111/01001/00	Top Panel	Gray
	111/01000/00	Front Plate	Black
10	217/00060/00	Fastening Piece	
11	111/01002/00	Backplate	
12	204/00116/00	Nut	

© Copyright, Alliance Laundry Systems LLC – DO NOT COPY or TRANSMIT

Coin Drop - Electronic Coin Meter

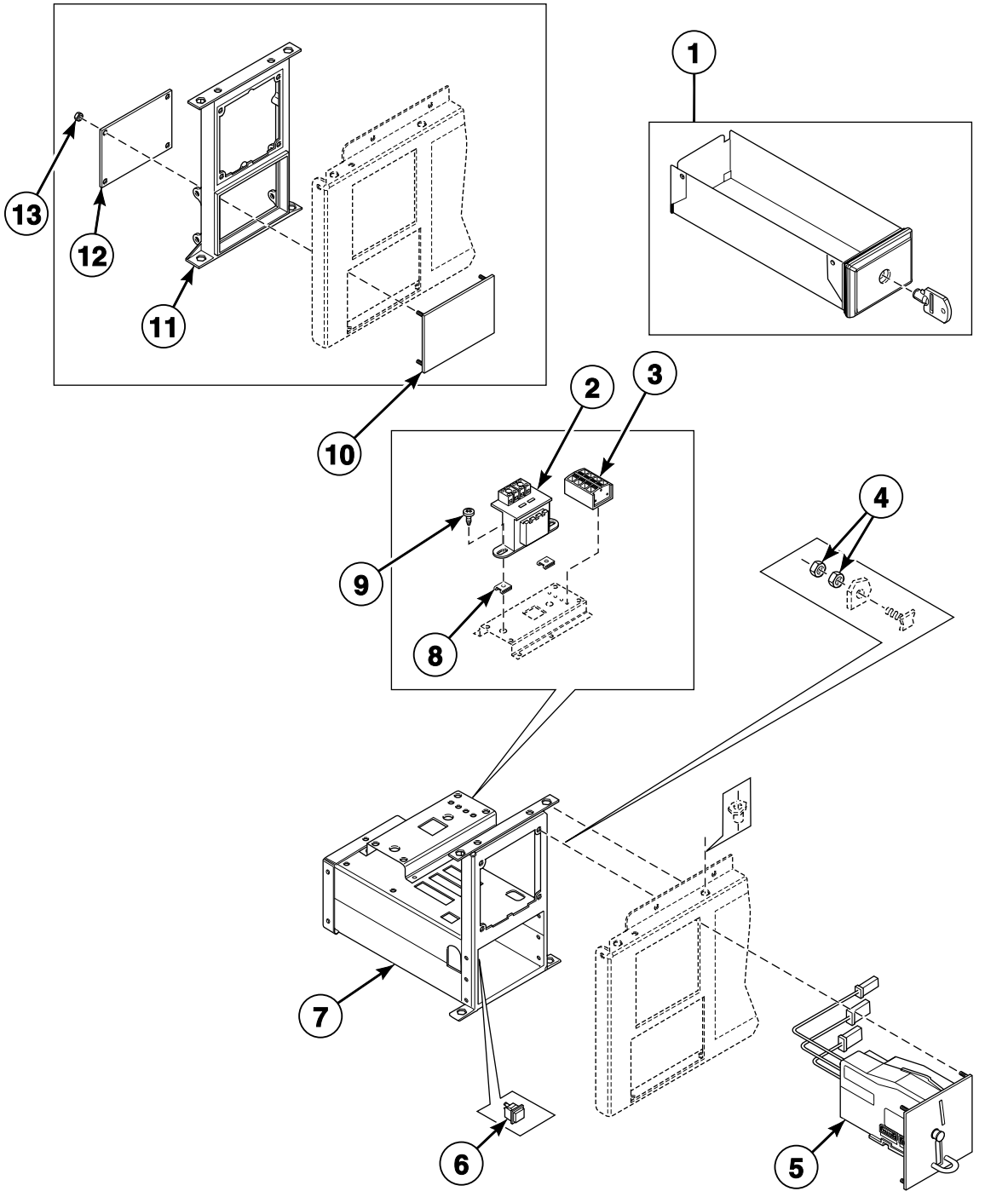

CFD511P_D0237

© Copyright, Alliance Laundry Systems LLC – DO NOT COPY or TRANSMIT

Coin Drop - Electronic Coin Meter

REF	PART NO.	DESCRIPTION	COMMENTS
1	254/00077/00	Coin Box	
	254/00077/02	Key	
2	209/00682/00	Transformer	
3	209/00683/00	Input Block	
4	204/00008/00	Nut	
5	B12311401	Coin Drop	Cygnus models
6	209/00396/00	Pushbutton	
7	152/00112/50	Electronic Coin Meter Housing	
8	208/00002/00	Nut	
9	208/00014/00	Screw	
10	111/01001/00	Top Panel	Gray
	111/01000/00	Front Plate	Black
11	217/00060/00	Fastening Piece	
12	111/01002/00	Backplate	
13	204/00116/00	Nut	

© Copyright, Alliance Laundry Systems LLC – DO NOT COPY or TRANSMIT

Front, Left Side and Upper Back Panels - *50, *55, *176 and *234 Models

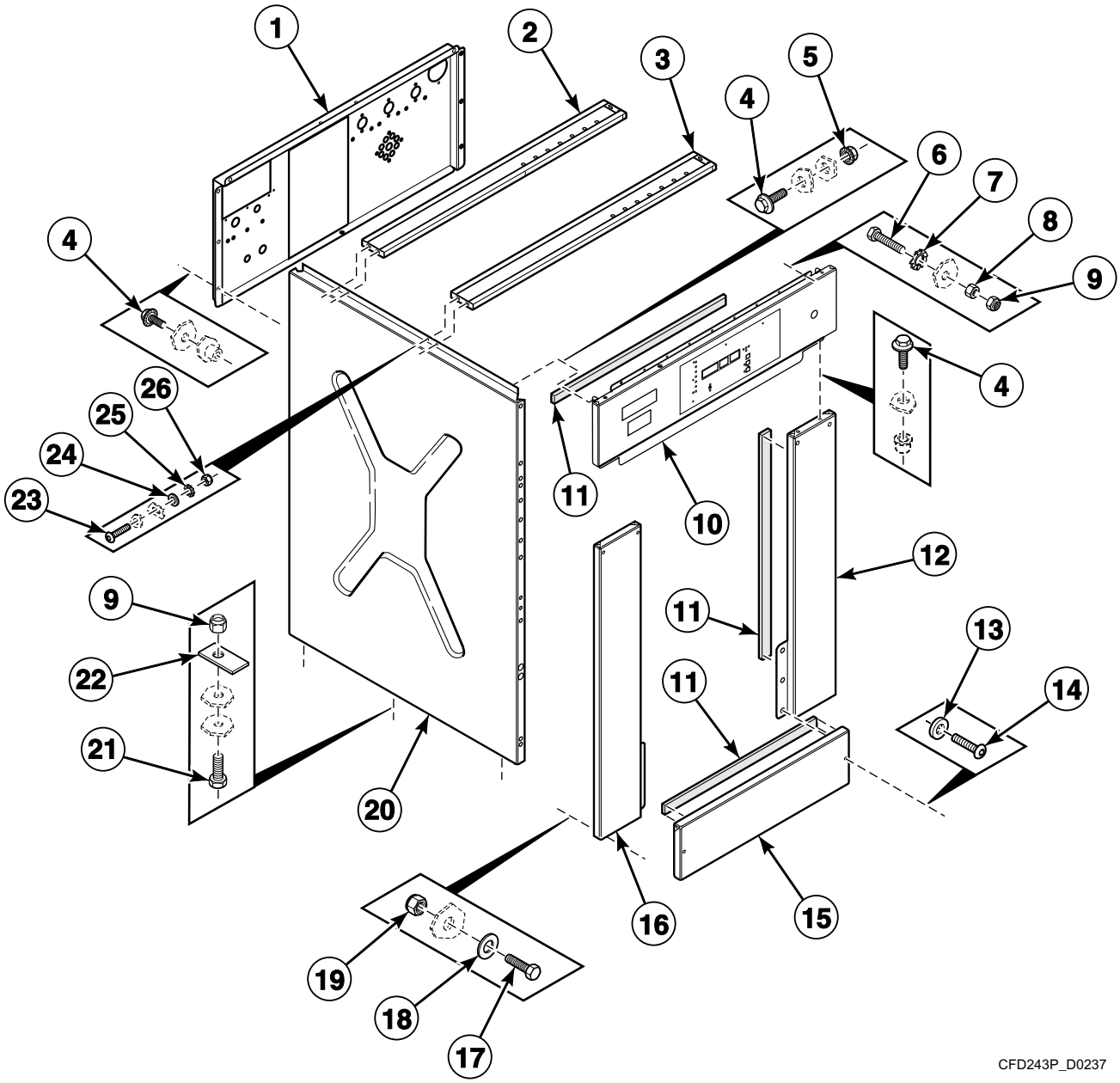

© Copyright, Alliance Laundry Systems LLC – DO NOT COPY or TRANSMIT

Front, Left Side and Upper Back Panels - *50, *55, *176 and *234 Models

REF	PART NO.	DESCRIPTION	COMMENTS
1	111/01158/90	Backbridge	
2	111/10102/00	Dispenser Rear Mounting Plate	
3	111/10101/00	Dispenser Front Mounting Plate	
4	206/00099/00	Bolt	
5	206/00101/00	Nut	
6	205/00103/00	Bolt	
7	203/00004/00	Washer	
8	204/00106/00	Nut	
9	204/00009/00	Nut	
10	111/01706/00	Upper Front Panel	
11	246/00149/00	Gasket	
12	111/32957/50	Right Front Panel	
13	208/00009/00	Washer	
14	207/00101/00	Screw	
15	111/32943/00	Kickplate	
16	111/32951/50	Left Front Panel	
17	206/00042/00	Bolt	
18	201/00010/00	Washer	
19	204/00109/00	Nut	
20	111/32727/00	Side Panel	*176 models
	140/00007/00	Side Panel	*50, *55 and *234 models
21	205/00105/00	Bolt	
22	101/00007/00	Outlet Pipe Plate Assembly	
23	207/00032/00	Screw	
24	202/00004/00	Washer	
25	203/00006/00	Washer	
26	204/00007/00	Nut	

© Copyright, Alliance Laundry Systems LLC – DO NOT COPY or TRANSMIT

Front and Left Side Panels - *75 and *304 Models Through 9/30/08

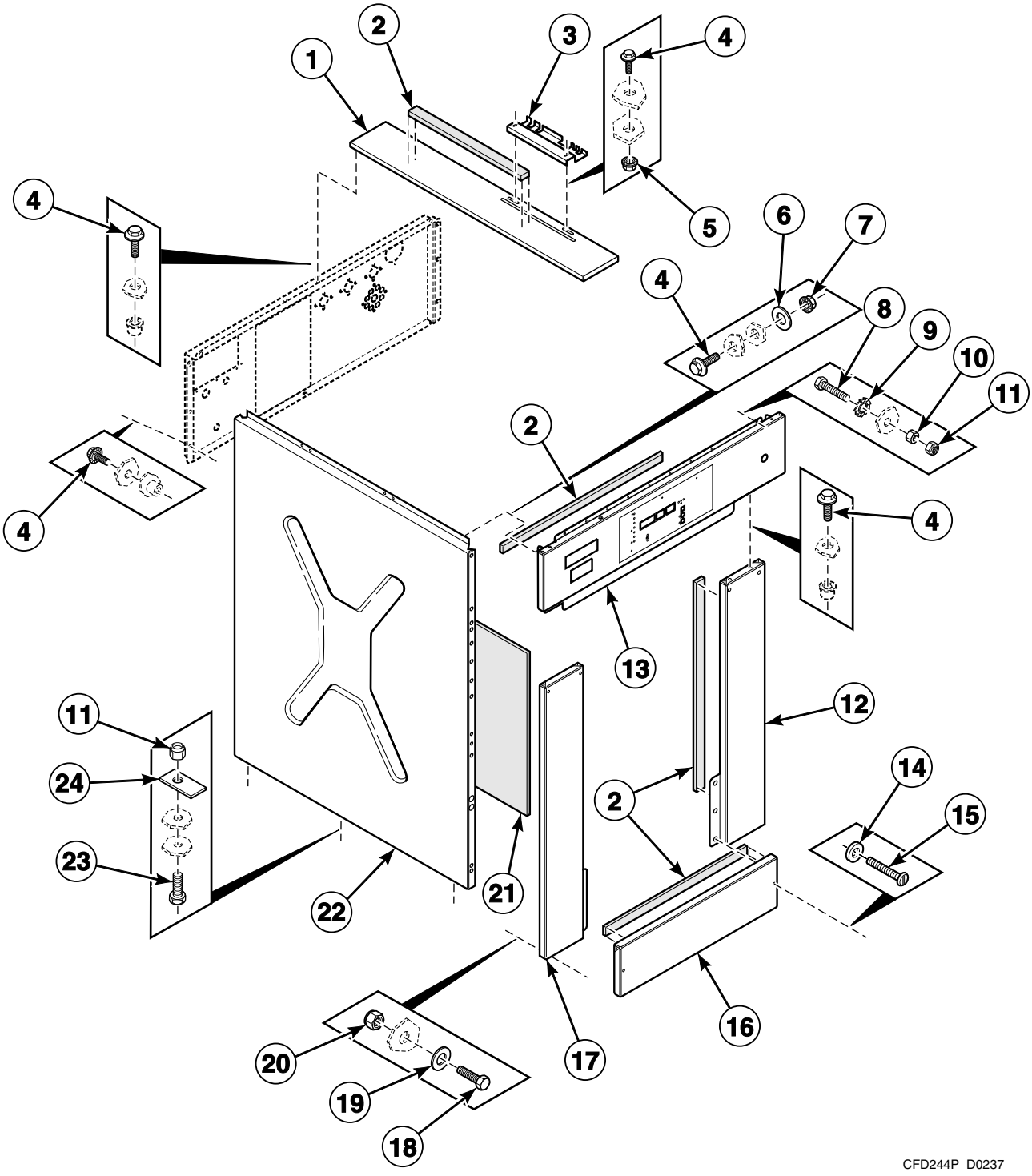

© Copyright, Alliance Laundry Systems LLC – DO NOT COPY or TRANSMIT

Front and Left Side Panels - *75 and *304 Models Through 9/30/08

REF	PART NO.	DESCRIPTION	COMMENTS
1	111/00207/00	Dispenser Mounting Plate	
2	246/00149/00	Gasket	
3	111/00117/00	Soap Box Support Plate	
4	206/00099/00	Bolt	
5	206/00101/00	Nut	
6	201/00006/00	Washer	
7	204/00005/00	Nut	
8	205/00103/00	Bolt	
9	203/00004/00	Washer	
10	204/00106/00	Nut	
11	204/00009/00	Nut	
12	111/32960/00	Right Front Panel	
13	111/01712/00	Upper Front Panel	
14	208/00009/00	Washer	
15	207/00101/00	Screw	
16	111/32943/00	Kickplate	
17	111/32948/00	Left Front Panel	
18	206/00042/00	Bolt	
19	201/00010/00	Washer	
20	204/00109/00	Nut	
21	246/00079/00	Side Panel Gasket	
22	133/00126/00	Side Panel	
23	205/00105/00	Bolt	
24	101/00007/00	Outlet Pipe Plate Assembly	

© Copyright, Alliance Laundry Systems LLC – DO NOT COPY or TRANSMIT

Front and Left Side Panels - *75 and *304 Models Starting 10/1/08 Through 11/13/11

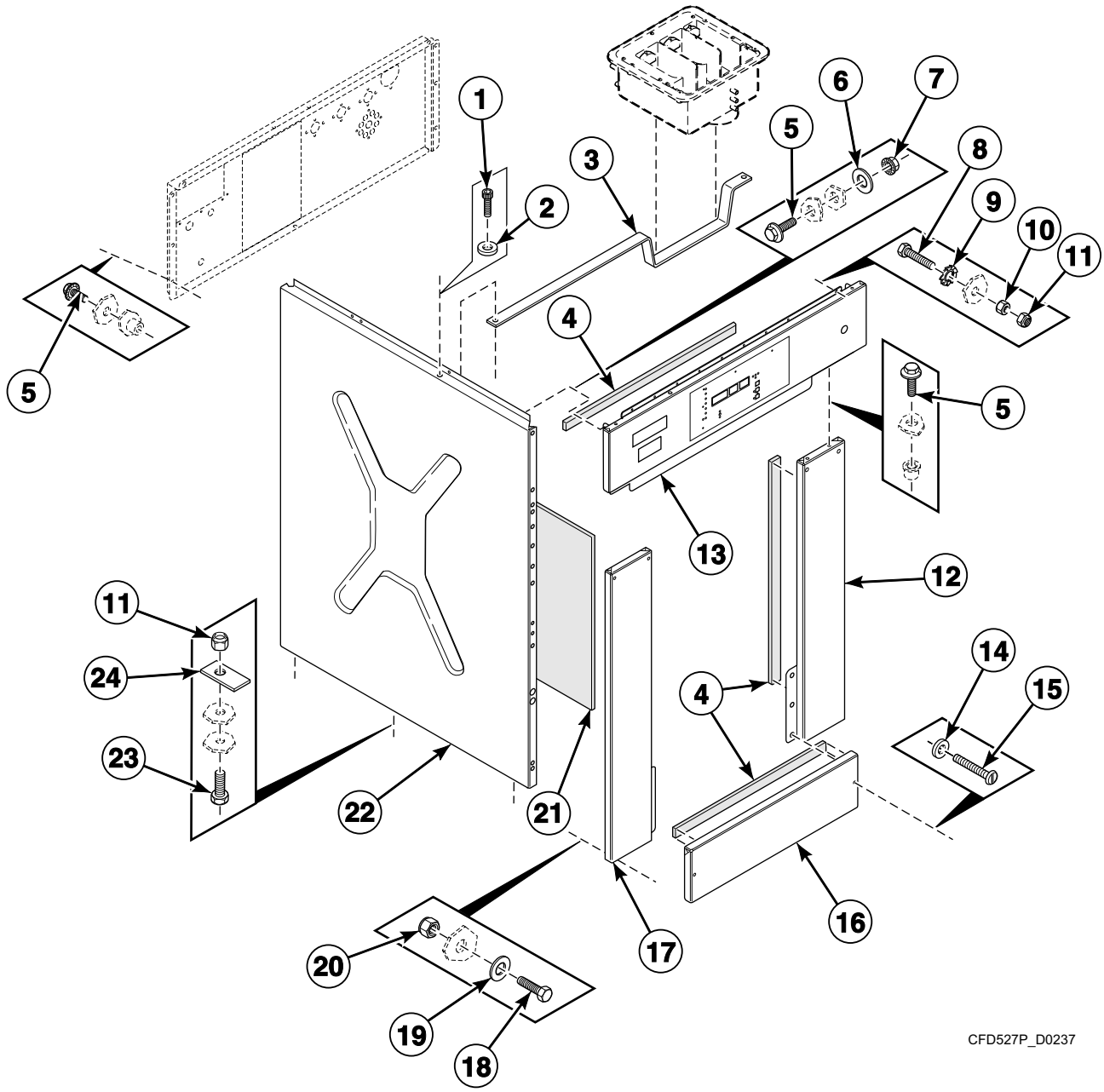

© Copyright, Alliance Laundry Systems LLC – DO NOT COPY or TRANSMIT

Front and Left Side Panels - *75 and *304 Models Starting 10/1/08 Through 11/13/11

REF	PART NO.	DESCRIPTION	COMMENTS
1	206/00166/00	Screw	
2	B12421401	Washer	
3	111/00207/11	Support Bracket	
4	246/00149/00	Gasket	
5	206/00099/00	Bolt	
6	201/00006/00	Washer	
7	204/00005/00	Nut	
8	205/00103/00	Bolt	
9	203/00004/00	Washer	
10	204/00106/00	Nut	
11	204/00009/00	Nut	
12	111/32960/00	Right Front Panel	
13	111/01712/00	Upper Front Panel	
14	208/00009/00	Washer	
15	207/00101/00	Screw	
16	111/32943/00	Kickplate	
17	111/32948/00	Left Front Panel	
18	206/00042/00	Bolt	
19	201/00010/00	Washer	
20	204/00109/00	Nut	
21	246/00079/00	Side Panel Gasket	
22	133/00126/00	Side Panel	
23	205/00105/00	Bolt	
24	101/00007/00	Outlet Pipe Plate Assembly	

© Copyright, Alliance Laundry Systems LLC – DO NOT COPY or TRANSMIT

Front and Left Side Panels - *75 and *304 Models Starting 11/14/11

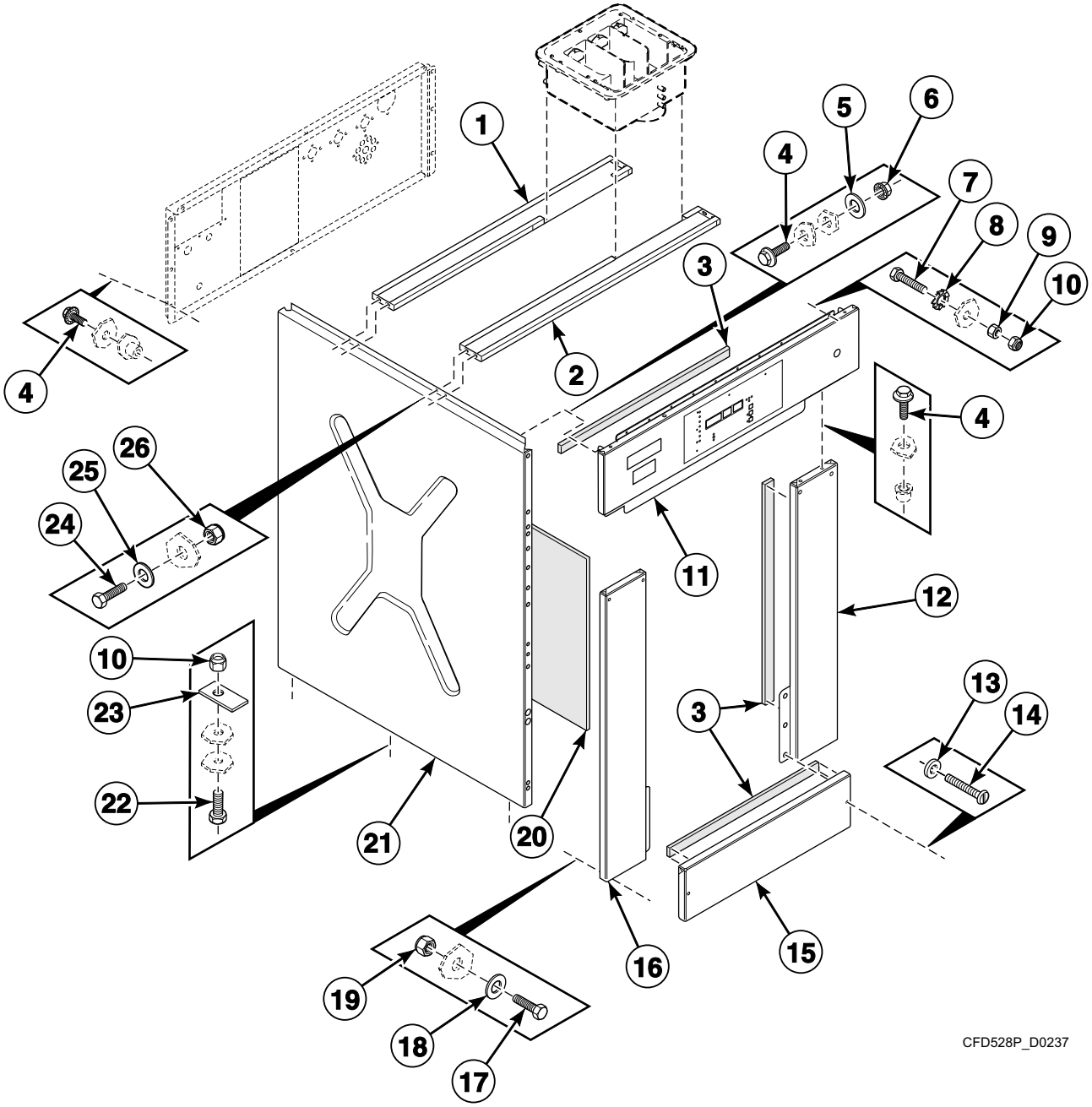

© Copyright, Alliance Laundry Systems LLC – DO NOT COPY or TRANSMIT

Front and Left Side Panels - *75 and *304 Models Starting 11/14/11

REF	PART NO.	DESCRIPTION	COMMENTS
1	B12456101	Support Bracket	Rear
2	B12456201	Support Bracket	Front
3	246/00149/00	Gasket	
4	206/00099/00	Bolt	
5	201/00006/00	Washer	
6	204/00005/00	Nut	
7	205/00103/00	Bolt	
8	203/00004/00	Washer	
9	204/00106/00	Nut	
10	204/00009/00	Nut	
11	111/01712/00	Upper Front Panel	
12	111/32960/00	Right Front Panel	
13	208/00009/00	Washer	
14	207/00101/00	Screw	
15	111/32943/00	Kickplate	
16	111/32948/00	Left Front Panel	
17	206/00042/00	Bolt	
18	201/00010/00	Washer	
19	204/00109/00	Nut	
20	246/00079/00	Side Panel Gasket	
21	133/00126/00	Side Panel	
22	205/00105/00	Bolt	
23	101/00007/00	Outlet Pipe Plate Assembly	
24	206/00027/00	Bolt	
25	202/00004/00	Washer	
26	204/00114/00	Nut	

© Copyright, Alliance Laundry Systems LLC – DO NOT COPY or TRANSMIT

Top, Right Side and Lower Back Panels - *50, *55, *176 and *234 Models

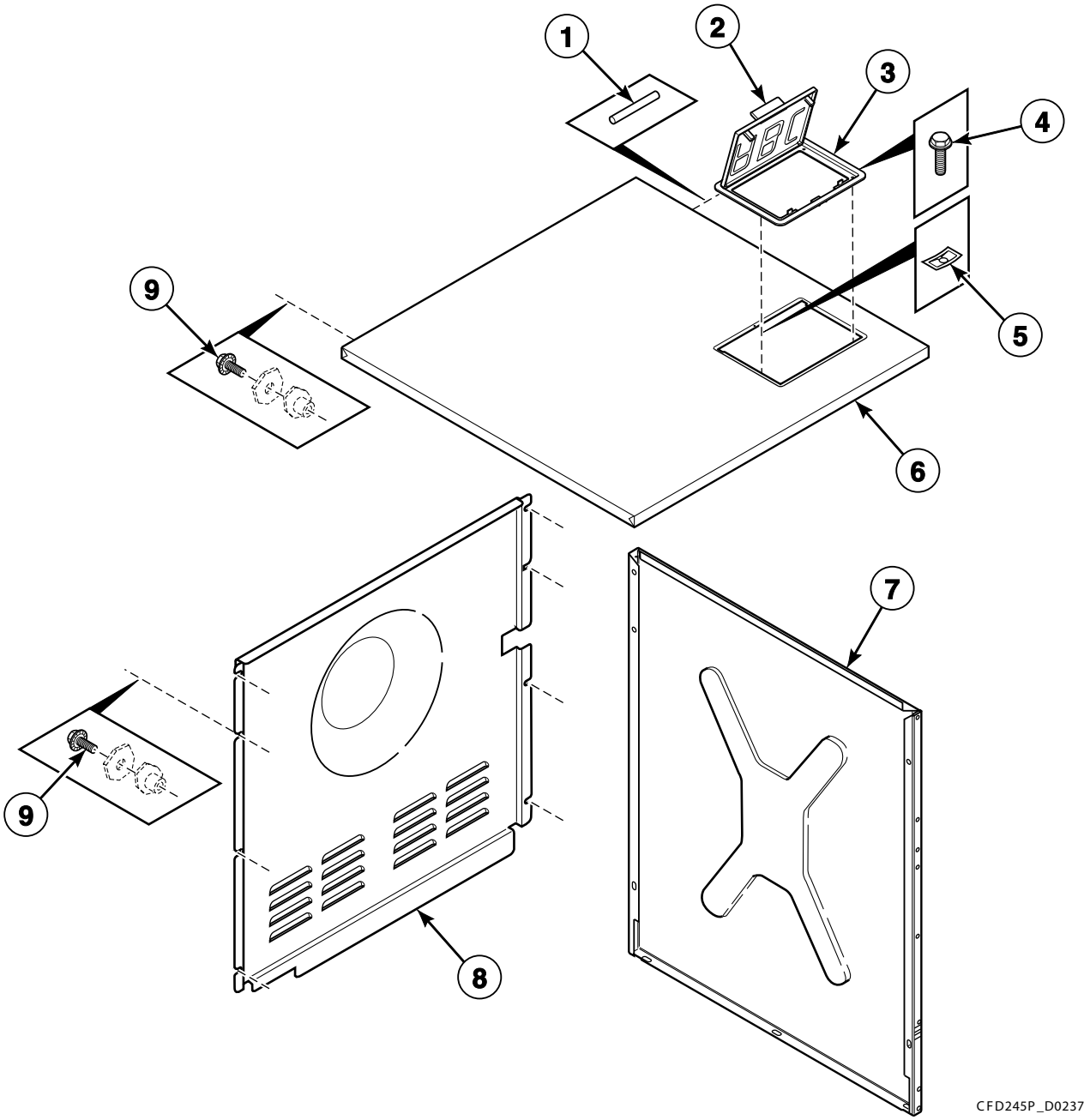

© Copyright, Alliance Laundry Systems LLC – DO NOT COPY or TRANSMIT

Top, Right Side and Lower Back Panels - *50, *55, *176 and *234 Models

REF	PART NO.	DESCRIPTION	COMMENTS
1	223/00103/04	Soap Dispenser Cover Hinge Rod	2 required
2	223/00103/01	Soap Dispenser Cover	
3	223/00103/03	Soap Dispenser Frame	
4	207/00131/00	Bolt	
5	208/00104/00	Nut	
6	140/00045/01	Top Panel	*50, *55 and *234 models
	111/32961/00	Cabinet Top Panel	*176 models
7	140/00007/00	Side Panel	*50, *55 and *234 models
	111/32727/00	Side Panel	*176 models
8	111/00127/10	Rear Panel	
9	206/00099/00	Bolt	

© Copyright, Alliance Laundry Systems LLC – DO NOT COPY or TRANSMIT

Top, Right Side and Lower Back Panels - *75 and *304 Models

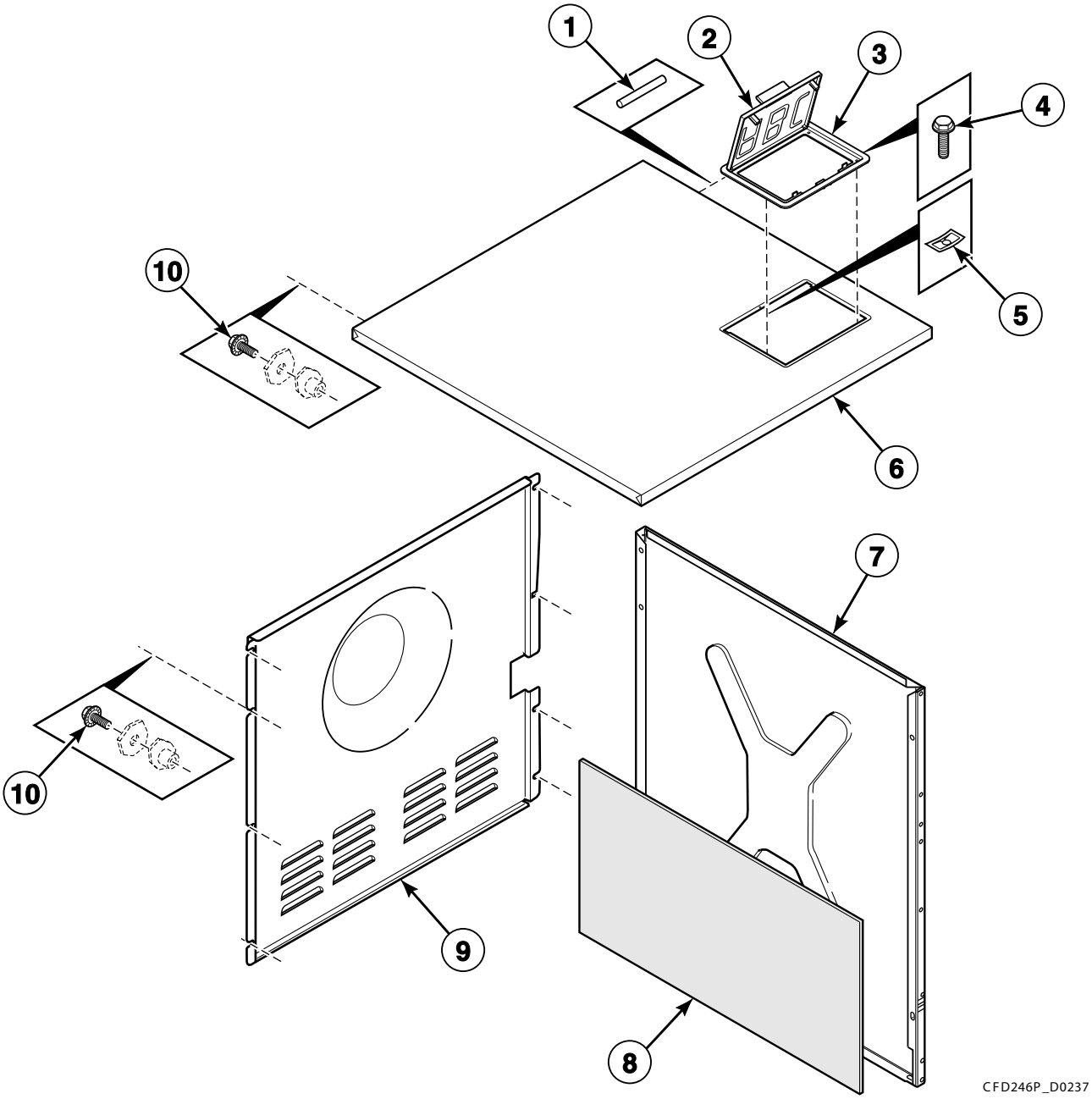

© Copyright, Alliance Laundry Systems LLC – DO NOT COPY or TRANSMIT

Top, Right Side and Lower Back Panels - *75 and *304 Models

REF	PART NO.	DESCRIPTION	COMMENTS
1	223/00103/04	Soap Dispenser Cover Hinge Rod	2 required
2	223/00103/01	Soap Dispenser Cover	
3	223/00103/03	Soap Dispenser Frame	
4	207/00131/00	Bolt	
5	208/00104/00	Nut	
6	111/05013/00	Top Panel	
7	133/00126/00	Side Panel	
8	246/00079/00	Side Panel Gasket	
9	111/00126/10	Rear Panel	
10	206/00099/00	Bolt	

© Copyright, Alliance Laundry Systems LLC – DO NOT COPY or TRANSMIT

Upper Back Panel - *50, *55, *176 and *234 Models (Drawing 1 of 3)

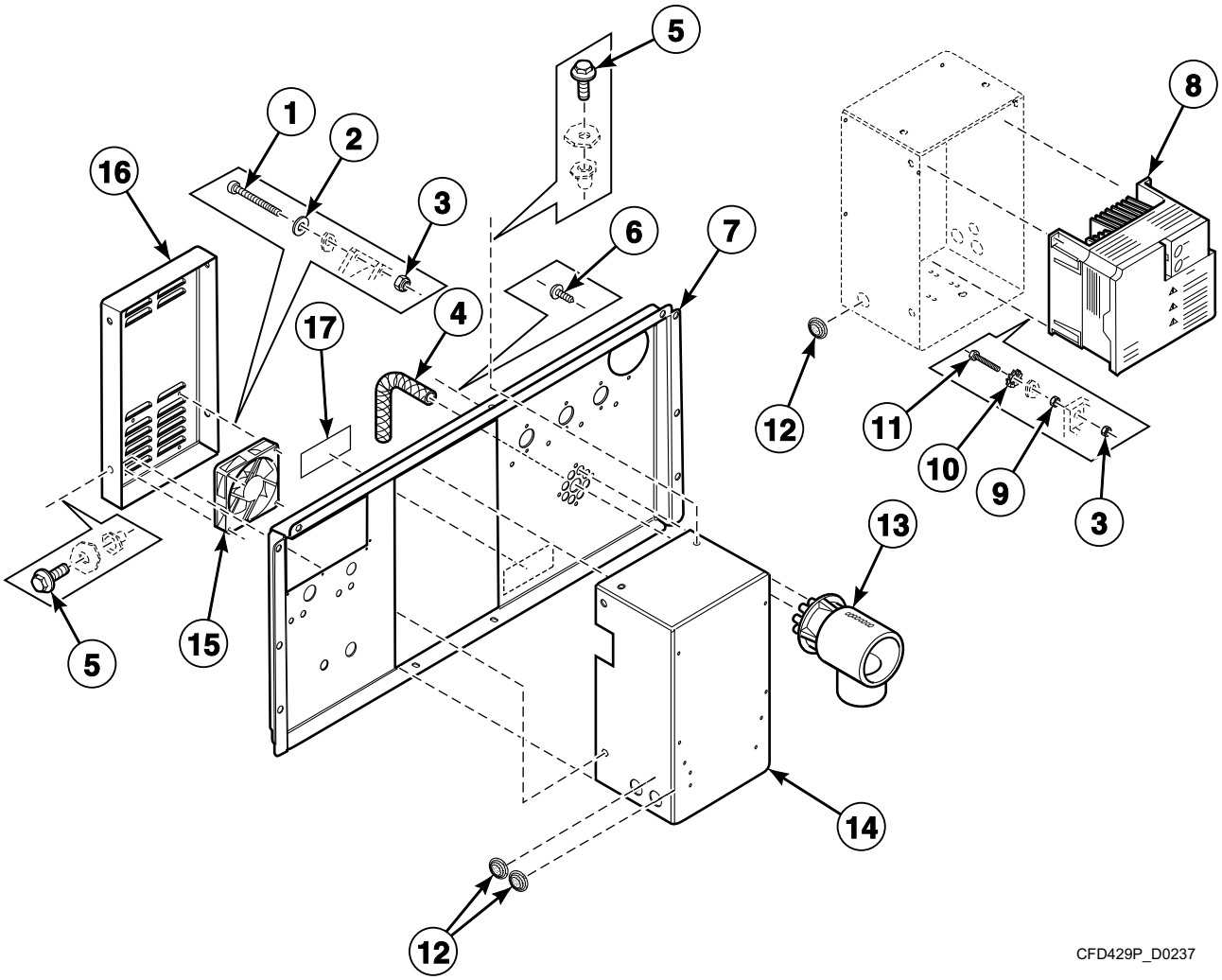

© Copyright, Alliance Laundry Systems LLC – DO NOT COPY or TRANSMIT

Upper Back Panel - *50, *55, *176 and *234 Models (Drawing 1 of 3)

REF	PART NO.	DESCRIPTION	COMMENTS
	F8410901	Parameter Unit Assembly	Mounts to the inverter drive; Used with 500-series inverter drives
	227/00171/00	Parameter Unit Assembly	Hand held
1	206/00136/00	Bolt	
2	202/00004/00	Washer	
3	204/00114/00	Nut	
4	223/00179/10	Pressure Hose	
5	206/00099/00	Bolt	
6	208/00130/00	Screw	
7	111/01158/90	Backbridge	
8	N/A	Inverter	FR-E520; 1x230 Volt
	227/00169/00	Inverter	FR-E540; 3x400 Volt
	227/00230/00	Inverter	FR-D720; 1x230 Volt; Cygnus models
	227/00238/00	Inverter	FR-D740; 3x400 Volt; Cygnus models
	F8421005	Inverter Kit	700-series; 200 Volt, 1 Phase; Models with 3.0 kW motor and V-belt; Includes F8421105 Drive; All other models except CSHW50P
	F8421006	Inverter Kit	700-series; 400 Volt, 3 Phase; Models with 3.0 kW motor and V-belt; Includes F8421106 Drive; All other models except CSHW50P
	F8421007	Inverter Kit	700-series; 200 Volt, 1 Phase; Models with 3.0 kW motor and flat belt; Includes F8421107 Drive; All other models except CSHW50P
	F8421008	Inverter Kit	700-series; 400 Volt, 3 Phase; Models with 3.0 kW motor and flat belt; Includes F8421108 Drive; All other models except CSHW50P
	F8421105	Drive	700-series; 200 Volt, 1 Phase; Models with 3.0 kW motor and V-belt; All other models except CSHW50P
	F8421106	Drive	700-series; 400 Volt, 3 Phase; Models with 3.0 kW motor and V-belt; All other models except CSHW50P
	F8421107	Drive	700-series; 200 Volt, 1 Phase; Models with 3.0 kW motor and flat belt; All other models except CSHW50P
	F8421108	Drive	700-series; 400 Volt, 3 Phase; Models with 3.0 kW motor and flat belt; All other models except CSHW50P
9	204/00007/00	Nut	
10	203/00005/00	Washer	
11	205/00108/00	Bolt	
12	223/00174/00	Grommet	
13	223/00249/00	Liquid Soap Manifold	
14	111/01150/00	Inverter Drive Box	
15	209/00287/00	Cooling Fan	
16	111/01158/11	Inverter Box Cover	
17	B12355001	Voltage Discharge Decal	

N/A = Part no longer available

© Copyright, Alliance Laundry Systems LLC – DO NOT COPY or TRANSMIT

Upper Back Panel - *50, *55, *176 and *234 Models (Drawing 2 of 3)

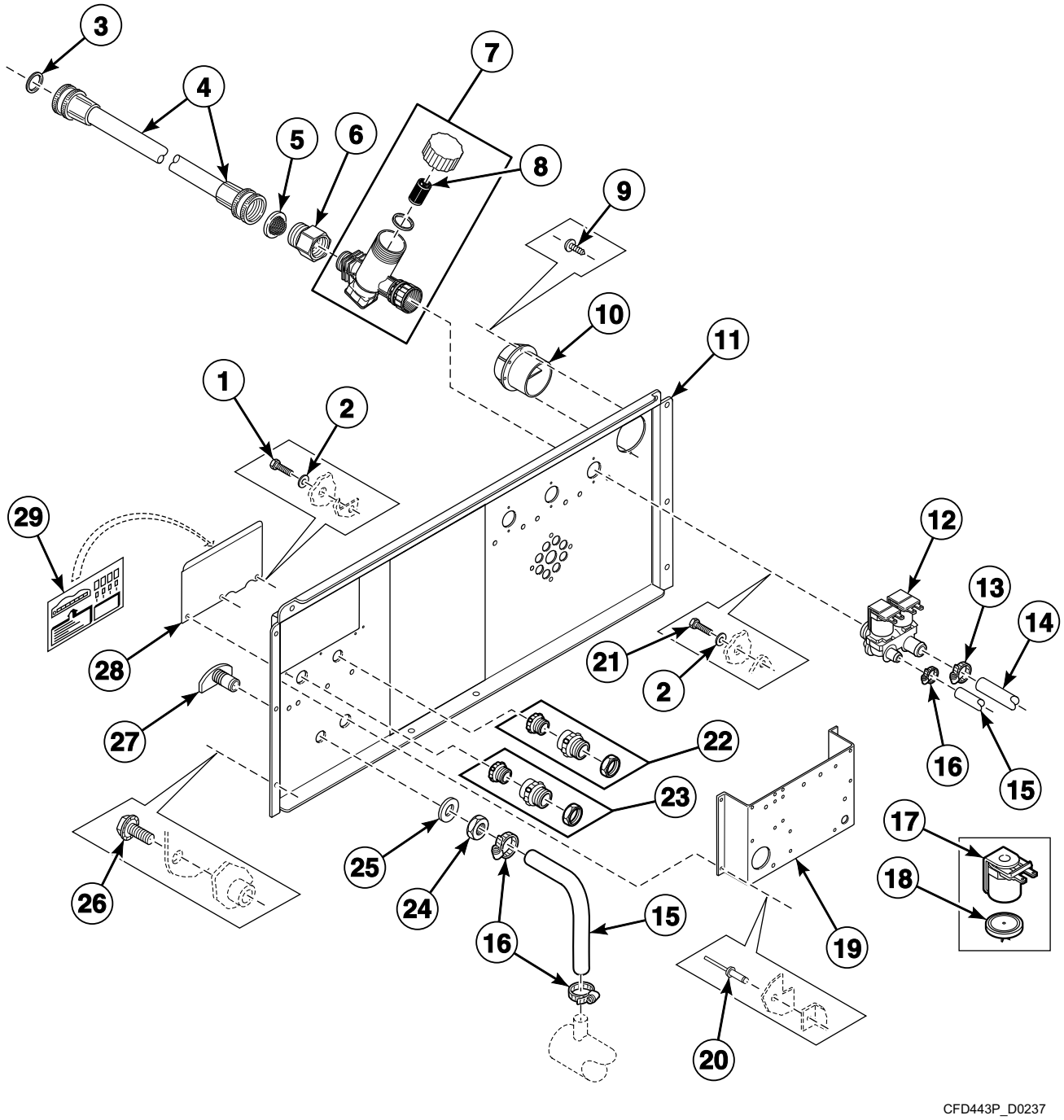

© Copyright, Alliance Laundry Systems LLC – DO NOT COPY or TRANSMIT

Upper Back Panel - *50, *55, *176 and *234 Models (Drawing 2 of 3)

REF	PART NO.	DESCRIPTION	COMMENTS
1	205/00113/00	Bolt	
2	202/00004/00	Washer	
3	20290	Washer	
4	F200164	Water Hose	Standard thread
	F200166	Water Hose	Metric thread
5	803615	Washer	
6	223/00050/01	Water Valve Adapter	Converts from standard to metric thread
7	209/00385/00	Filter	
8	209/00385/01	Filter	
9	211/00093/00	Rivet	
10	223/00102/07	Hose Vent	
11	111/01158/90	Backbridge	
12	209/00419/00	2-Way Inlet Valve	220 Volt; Standard thread; Used with F380939 Valve Repair Kit
	209/00316/00	2-Way Inlet Valve	220 Volt; Metric thread; Used with F380939 Valve Repair Kit
13	223/00011/00	Hose Clamp	
14	223/00059/00	Water Hose	Diameter 20 mm; Per meter
15	223/00044/00	Water Hose	Diameter 13 mm; Per meter
16	F200205	Hose Clamp	
17	209/00090/01	Inlet Valve Solenoid	
18	209/00316/02	Diaphragm	
19	N/A	Electrical Connection Plate Assembly	
20	208/00017/00	Rivet	
21	206/00027/00	Bolt	
22	211/00123/00	Cordlock	
23	211/00138/00	Cordlock	
24	204/00201/00	Nut	
25	201/00002/00	Washer	
26	206/00099/00	Bolt	
27	223/00001/04	Prewash and Mainwash Nozzle	
28	111/00094/10	Electrical Connection Plate	
29	229/00068/02	Electrical Connection Sticker	

N/A = Part no longer available

© Copyright, Alliance Laundry Systems LLC – DO NOT COPY or TRANSMIT

Upper Back Panel - *50, *55, *176 and *234 Models (Drawing 3 of 3)

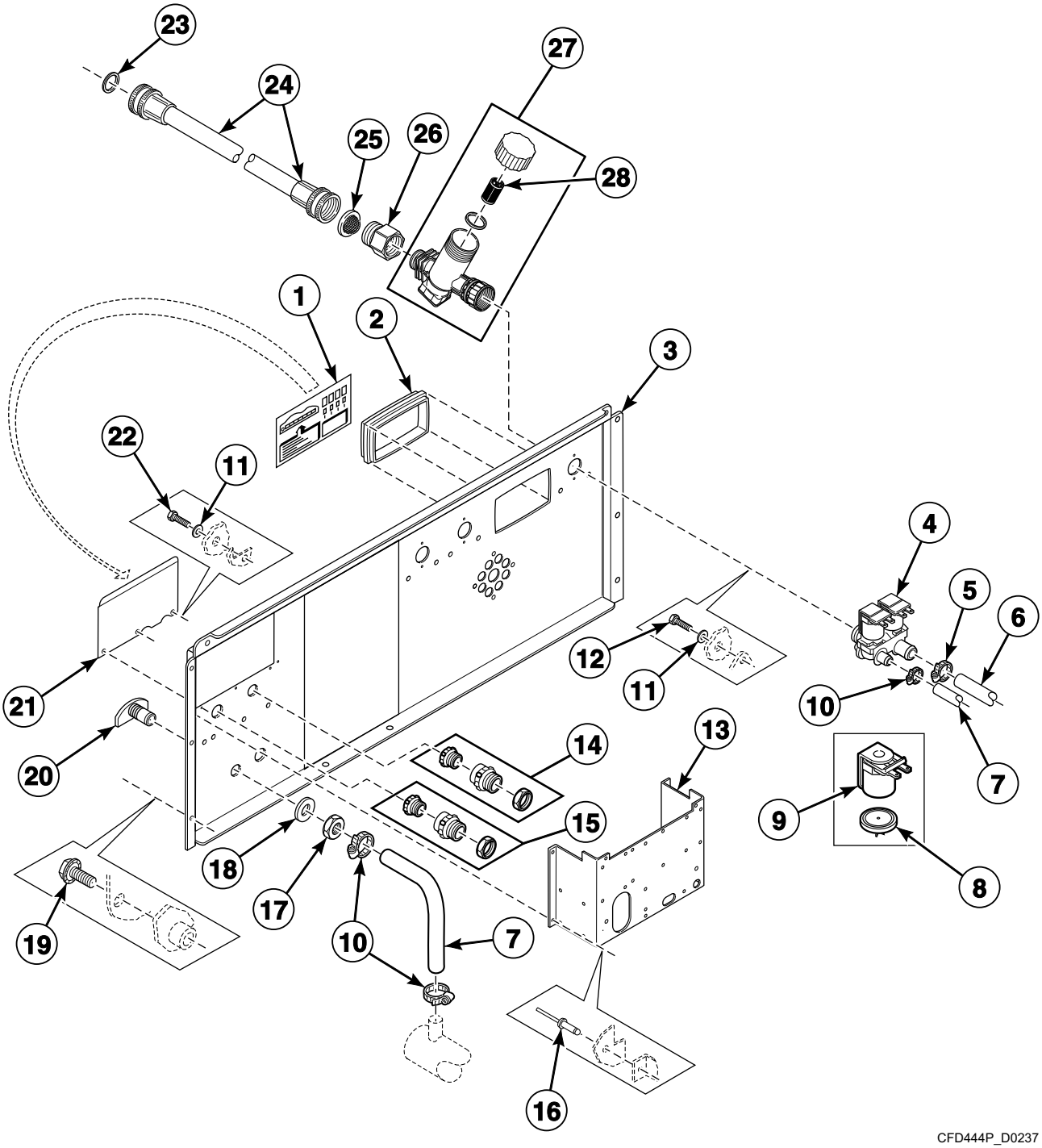

© Copyright, Alliance Laundry Systems LLC – DO NOT COPY or TRANSMIT

Upper Back Panel - *50, *55, *176 and *234 Models (Drawing 3 of 3)

REF	PART NO.	DESCRIPTION	COMMENTS
	211/00093/00	Rivet	
1	229/00068/02	Electrical Connection Sticker	
2	223/00226/00	Vent Tube	
3	111/01158/35	Backbridge	
4	209/00419/00	2-Way Inlet Valve	220 Volt; Standard thread; Used with F380939 Valve Repair Kit
	209/00316/00	2-Way Inlet Valve	220 Volt; Metric thread; Used with F380939 Valve Repair Kit
5	223/00011/00	Hose Clamp	
6	223/00059/00	Water Hose	Diameter 20 mm; Per meter
7	223/00044/00	Water Hose	Diameter 13 mm; Per meter
8	209/00316/02	Diaphragm	
9	209/00090/01	Inlet Valve Solenoid	
10	F200205	Hose Clamp	
11	202/00004/00	Washer	
12	206/00027/00	Bolt	
13	N/A	Electrical Connection Plate Assembly	
14	211/00123/00	Cordlock	
15	211/00138/00	Cordlock	
16	208/00017/00	Rivet	
17	204/00201/00	Nut	
18	201/00002/00	Washer	
19	206/00099/00	Bolt	
20	223/00001/04	Prewash and Mainwash Nozzle	
21	111/00094/10	Electrical Connection Plate	
22	205/00113/00	Bolt	
23	20290	Washer	
24	F200164	Water Hose	Standard thread
	F200166	Water Hose	Metric thread
25	803615	Washer	
26	223/00050/01	Water Valve Adapter	Converts from standard to metric thread
27	209/00385/00	Filter	
28	209/00385/01	Filter	

N/A = Part no longer available

© Copyright, Alliance Laundry Systems LLC – DO NOT COPY or TRANSMIT

Upper Back Panel - *75 and *304 Models (Drawing 1 of 3)

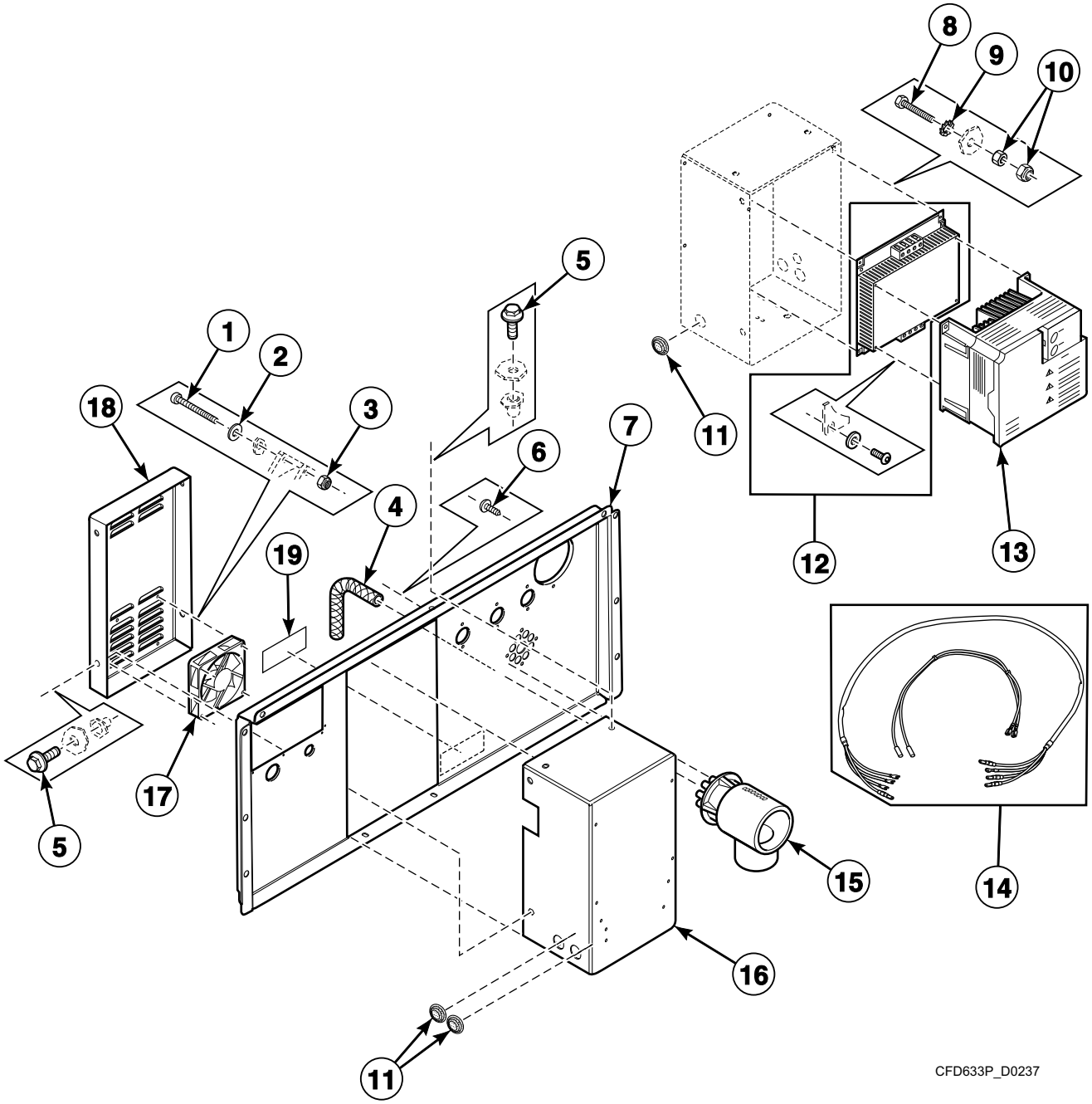

© Copyright, Alliance Laundry Systems LLC – DO NOT COPY or TRANSMIT

Upper Back Panel - *75 and *304 Models (Drawing 1 of 3)

REF	PART NO.	DESCRIPTION	COMMENTS
	F8410901	Parameter Unit Assembly	Mounts to the inverter drive; Used with 500-series inverter drives
	227/00171/00	Parameter Unit Assembly	Hand held
1	206/00136/00	Bolt	
2	202/00004/00	Washer	
3	204/00114/00	Nut	
4	223/00179/10	Pressure Hose	
5	206/00099/00	Bolt	
6	208/00130/00	Screw	
7	111/01166/90	Backbridge	
8	205/00108/00	Bolt	
9	203/00005/00	Washer	
10	204/00107/00	Nut	
11	223/00174/00	Grommet	
12	227/00163/00	Noise Filter	3.7 kW
13	227/00133/00	Inverter	FR-E520; 3x230 Volt
	227/00134/00	Inverter	FR-E540; 3x400 Volt
	227/00224/00	Inverter	FR-D720; 3x230 Volt; Cygnus models
	227/00231/00	Inverter	FR-D740; 3x400 Volt; Cygnus models
	F8421009	Inverter Kit	700-series; 200 Volt, 3 Phase; Models with 4.0 kW motor and V-belt; Includes F8421109 Drive; All other models except CSHW75P
	F8421010	Inverter Kit	700-series; 400 Volt, 3 Phase; Models with 4.0 kW motor and V-belt; Includes F8421110 Drive; All other models except CSHW75P
	F8421011	Inverter Kit	700-series; 200 Volt, 3 Phase; Models with 4.0 kW motor and flat belt; Includes F8421111 Drive; All other models except CSHW75P
	F8421012	Inverter Kit	700-series; 400 Volt, 3 Phase; Models with 4.0 kW motor and flat belt; Includes F8421112 Drive; All other models except CSHW75P
	F8421109	Drive	700-series; 200 Volt, 3 Phase; Models with 4.0 kW motor and V-belt; All other models except CSHW75P
	F8421110	Drive	700-series; 400 Volt, 3 Phase; Models with 4.0 kW motor and V-belt; All other models except CSHW75P
	F8421111	Drive	700-series; 200 Volt, 3 Phase; Models with 4.0 kW motor and flat belt; All other models except CSHW75P
	F8421112	Drive	700-series; 400 Volt, 3 Phase; Models with 4.0 kW motor and flat belt; All other models except CSHW75P
14	210/38729UL/15	Inverter to Motor Harness	
15	223/00249/00	Liquid Soap Manifold	
16	111/01149/00	Inverter Drive Box	
17	209/00287/00	Cooling Fan	
18	111/01158/11	Inverter Box Cover	
19	B12355001	Voltage Discharge Decal	

© Copyright, Alliance Laundry Systems LLC – DO NOT COPY or TRANSMIT

Upper Back Panel - *75 and *304 Models (Drawing 2 of 3)

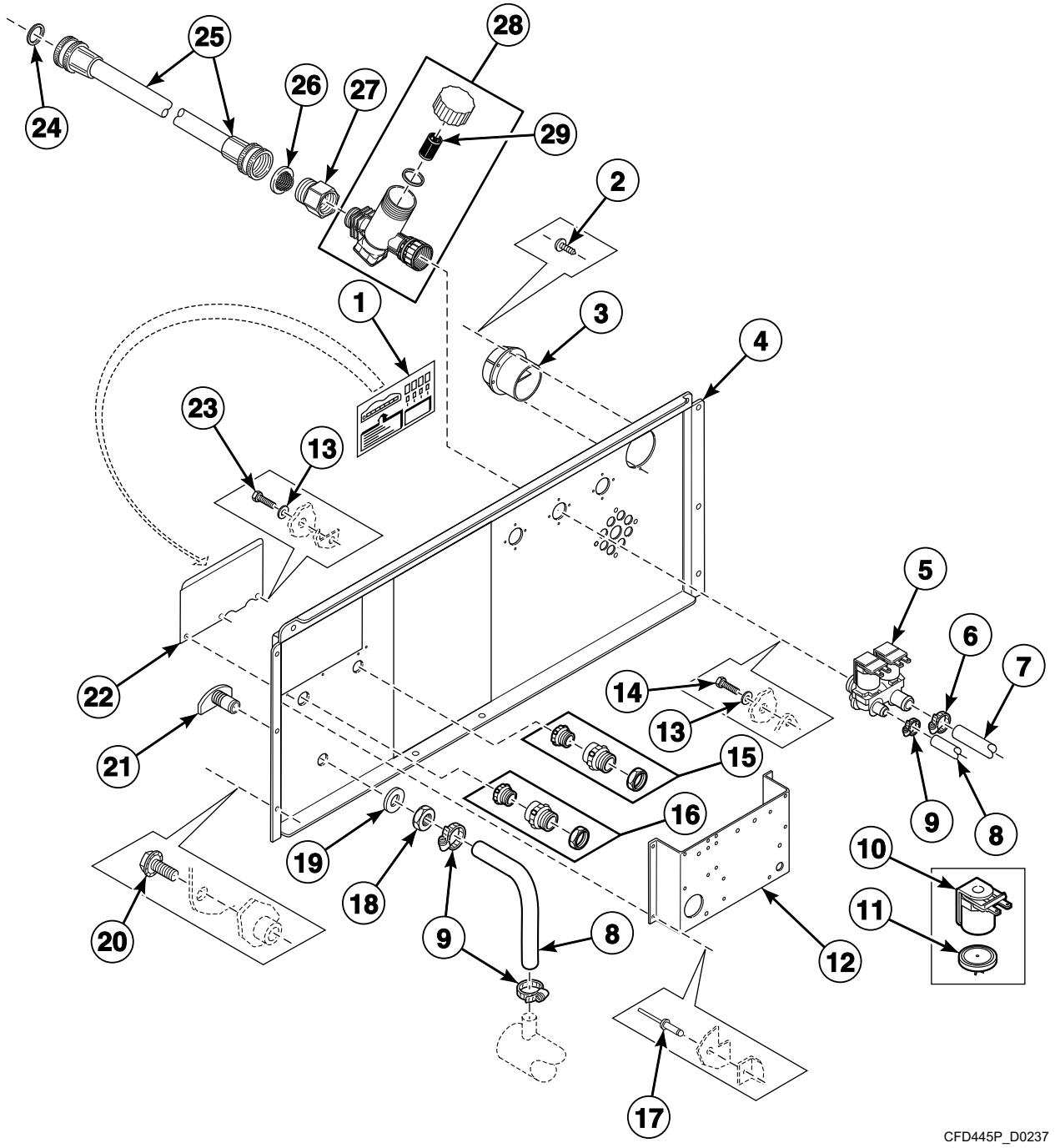

© Copyright, Alliance Laundry Systems LLC – DO NOT COPY or TRANSMIT

Upper Back Panel - *75 and *304 Models (Drawing 2 of 3)

REF	PART NO.	DESCRIPTION	COMMENTS
1	229/00068/02	Electrical Connection Sticker	
2	211/00093/00	Rivet	
3	223/00102/07	Hose Vent	
4	111/01166/90	Backbridge	
5	209/00316/00	2-Way Inlet Valve	220 Volt
6	223/00011/00	Hose Clamp	
7	223/00059/00	Water Hose	Diameter 20 mm; Per meter
8	223/00044/00	Water Hose	Diameter 13 mm; Per meter
9	F200205	Hose Clamp	
10	209/00090/01	Inlet Valve Solenoid	220 Volt
11	209/00316/02	Diaphragm	
12	111/00188/06	Electrical Connection Plate	
13	202/00004/00	Washer	
14	206/00027/00	Bolt	
15	211/00123/00	Cordlock	
16	211/00138/00	Cordlock	
17	208/00017/00	Rivet	
18	204/00201/00	Nut	
19	201/00002/00	Washer	
20	206/00099/00	Bolt	
21	223/00001/04	Prewash and Mainwash Nozzle	
22	111/00094/10	Electrical Connection Plate	
23	206/00014/00	Bolt	
24	20290	Washer	
25	F200164	Water Hose	Standard thread
	F200166	Water Hose	Metric thread
26	803615	Washer	
27	223/00050/01	Water Valve Adapter	Converts from standard to metric thread
28	209/00385/00	Filter	
29	209/00385/01	Filter	

© Copyright, Alliance Laundry Systems LLC – DO NOT COPY or TRANSMIT

Upper Back Panel - *75 and *304 Models (Drawing 3 of 3)

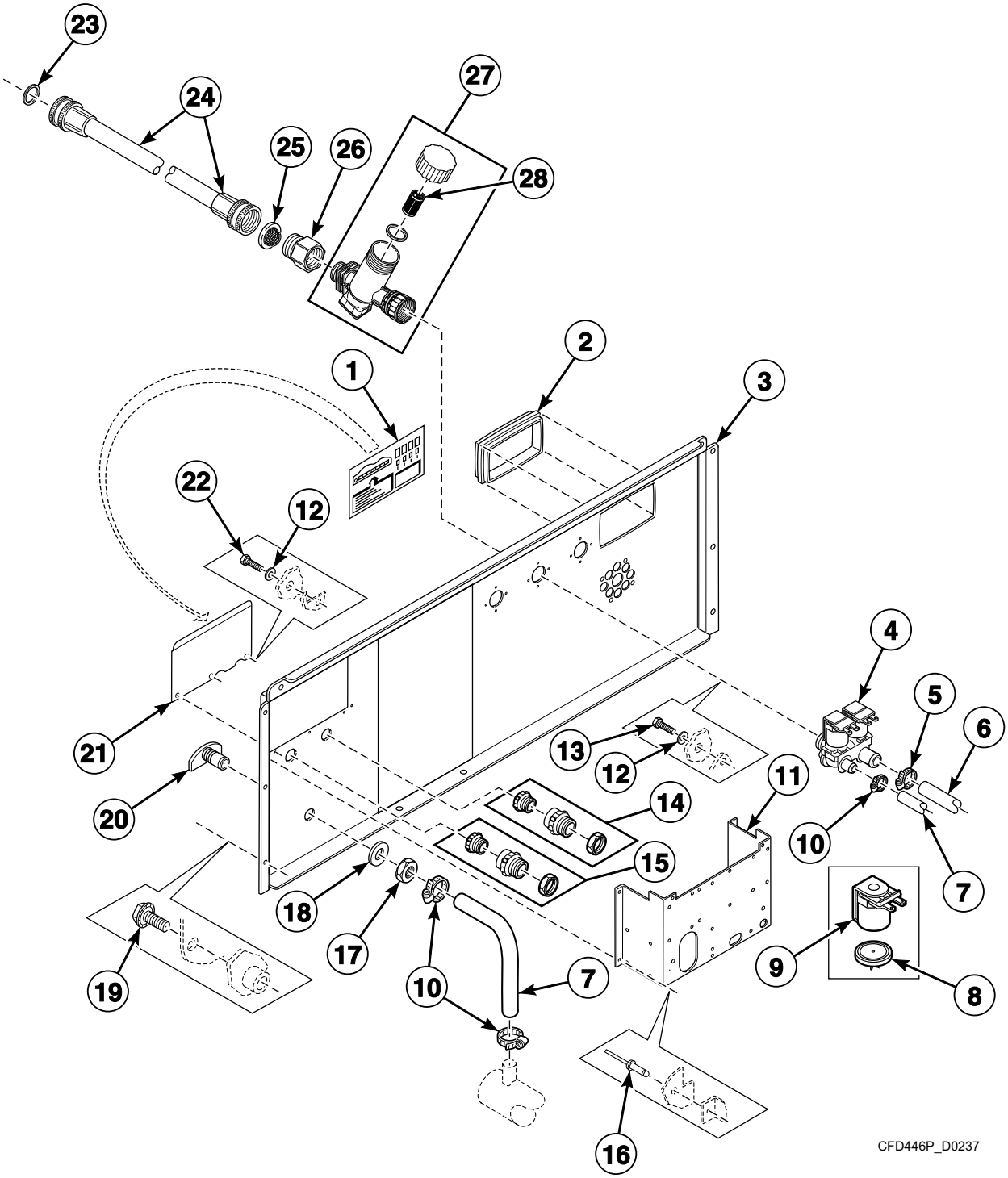

© Copyright, Alliance Laundry Systems LLC – DO NOT COPY or TRANSMIT

Upper Back Panel - *75 and *304 Models (Drawing 3 of 3)

REF	PART NO.	DESCRIPTION	COMMENTS
	209/00316/02	Diaphragm	
1	229/00068/02	Electrical Connection Sticker	
2	223/00226/00	Vent Tube	
3	111/01166/70	Backbridge	
4	209/00316/00	2-Way Inlet Valve	220 Volt
5	223/00011/00	Hose Clamp	
6	223/00059/00	Water Hose	Diameter 20 mm; Per meter
7	223/00044/00	Water Hose	Diameter 13 mm; Per meter
8	209/00090/01	Inlet Valve Solenoid	
9	211/00093/00	Rivet	
10	F200205	Hose Clamp	
11	111/00188/06	Electrical Connection Plate	
12	202/00004/00	Washer	
13	206/00027/00	Bolt	
14	211/00123/00	Cordlock	
15	211/00138/00	Cordlock	
16	208/00017/00	Rivet	
17	204/00201/00	Nut	
18	201/00002/00	Washer	
19	206/00099/00	Bolt	
20	223/00001/04	Prewash and Mainwash Nozzle	
21	111/00094/10	Electrical Connection Plate	
22	206/00014/00	Bolt	
23	20290	Washer	
24	F200164	Water Hose	Standard thread
	F200166	Water Hose	Metric thread
25	803615	Washer	
26	223/00050/01	Water Valve Adapter	Converts from standard to metric thread
27	209/00385/00	Filter	
28	209/00385/01	Filter	

© Copyright, Alliance Laundry Systems LLC – DO NOT COPY or TRANSMIT

Electrical Connection Assembly

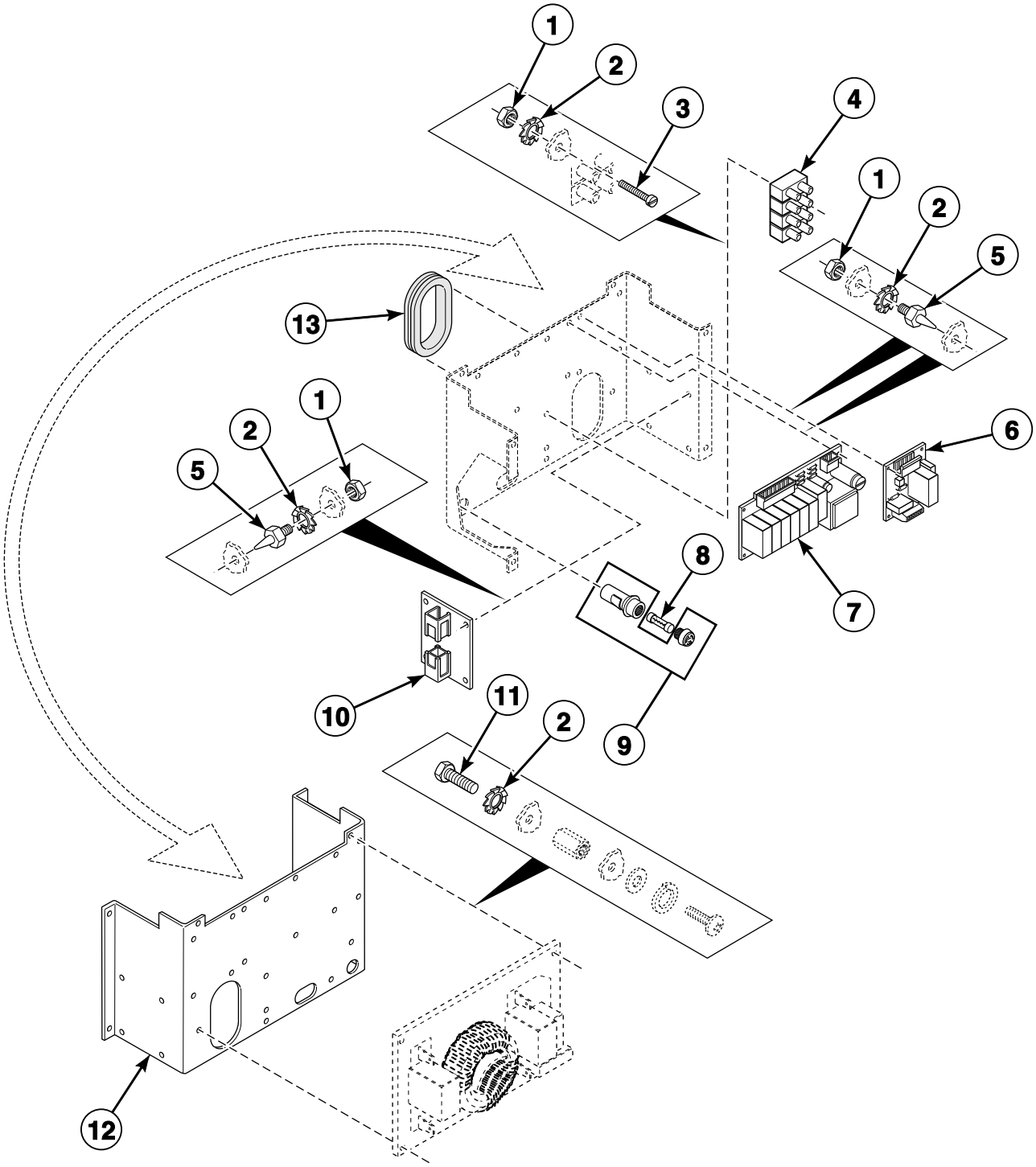

CFD253P_D0237

© Copyright, Alliance Laundry Systems LLC – DO NOT COPY or TRANSMIT

Electrical Connection Assembly

REF	PART NO.	DESCRIPTION	COMMENTS
1	204/00007/00	Nut	
2	203/00006/00	Washer	
3	207/00031/00	Screw	
4	209/00058/00	Terminal Block	4 pole
5	211/00120/00	Standoff	For printboards
6	209/00438/50	Central Control Board	240 Volt
7	209/00218/13	Soap Injection PCB with Fuse	For soap injection with fuse; 220 Volt
8	209/00468/00	Fuse	3 Amp
9	209/00202/00	Fuse Holder	
10	209/00540/00	Network Connection Printboard	
11	206/00027/00	Bolt	
12	111/00188/06	Electrical Connection Plate	
13	223/00203/00	Grommet	

© Copyright, Alliance Laundry Systems LLC – DO NOT COPY or TRANSMIT

Electrical Connection Assembly - *50, *55, *176 and *234 Models

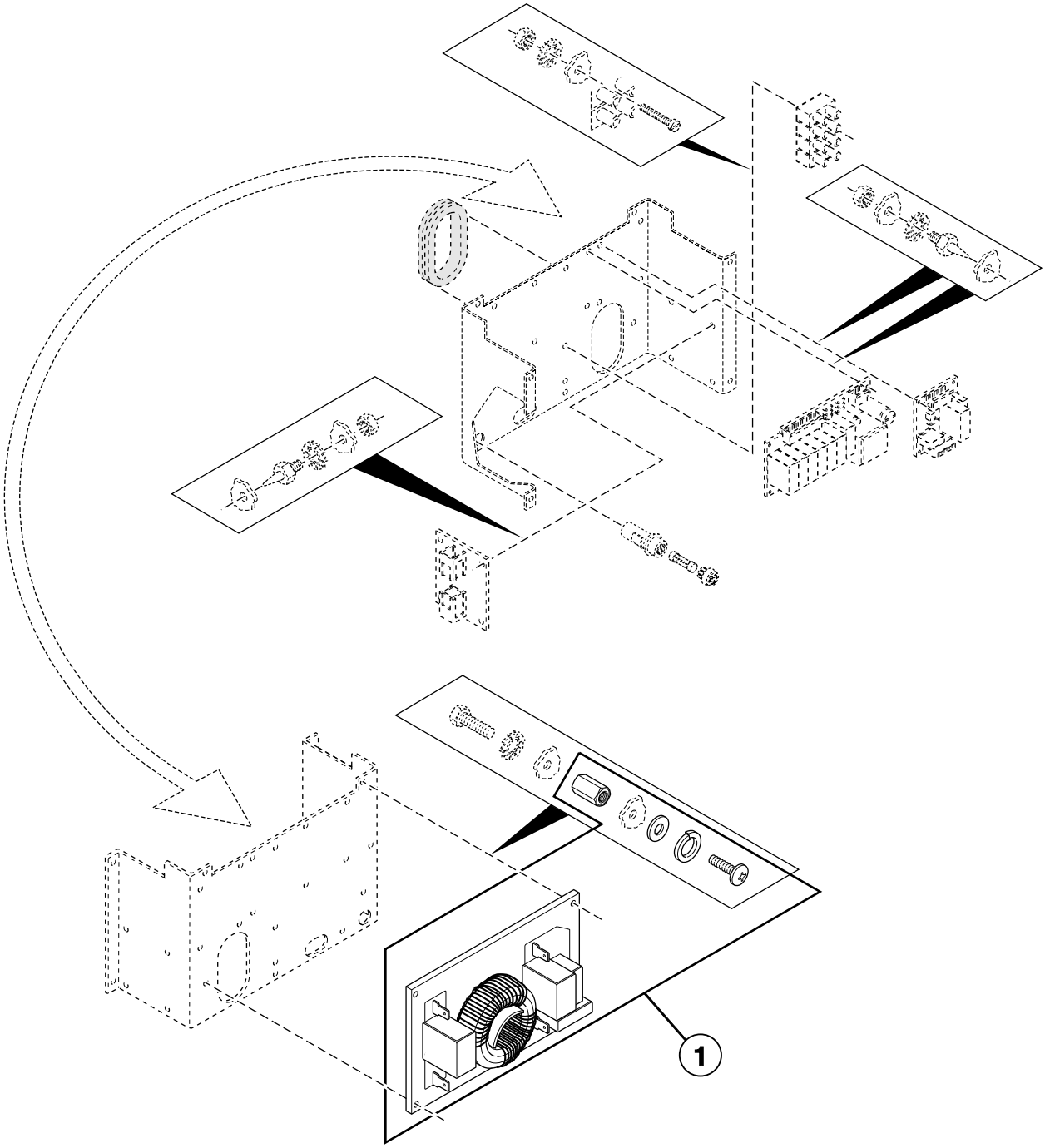

CFD253PA_D0237

© Copyright, Alliance Laundry Systems LLC – DO NOT COPY or TRANSMIT

Electrical Connection Assembly - *50, *55, *176 and *234 Models

REF	PART NO.	DESCRIPTION	COMMENTS
1	227/00177/00	Filter	B0301044/16A1
	227/00242/00	Noise Filter	B0211098/16A3
	227/00179/00	Filter	B0211067/40A3
	227/00180/00	Filter	B0308117/45A1

© Copyright, Alliance Laundry Systems LLC – DO NOT COPY or TRANSMIT

Control Module - *50, *55, *176 and *234 Models

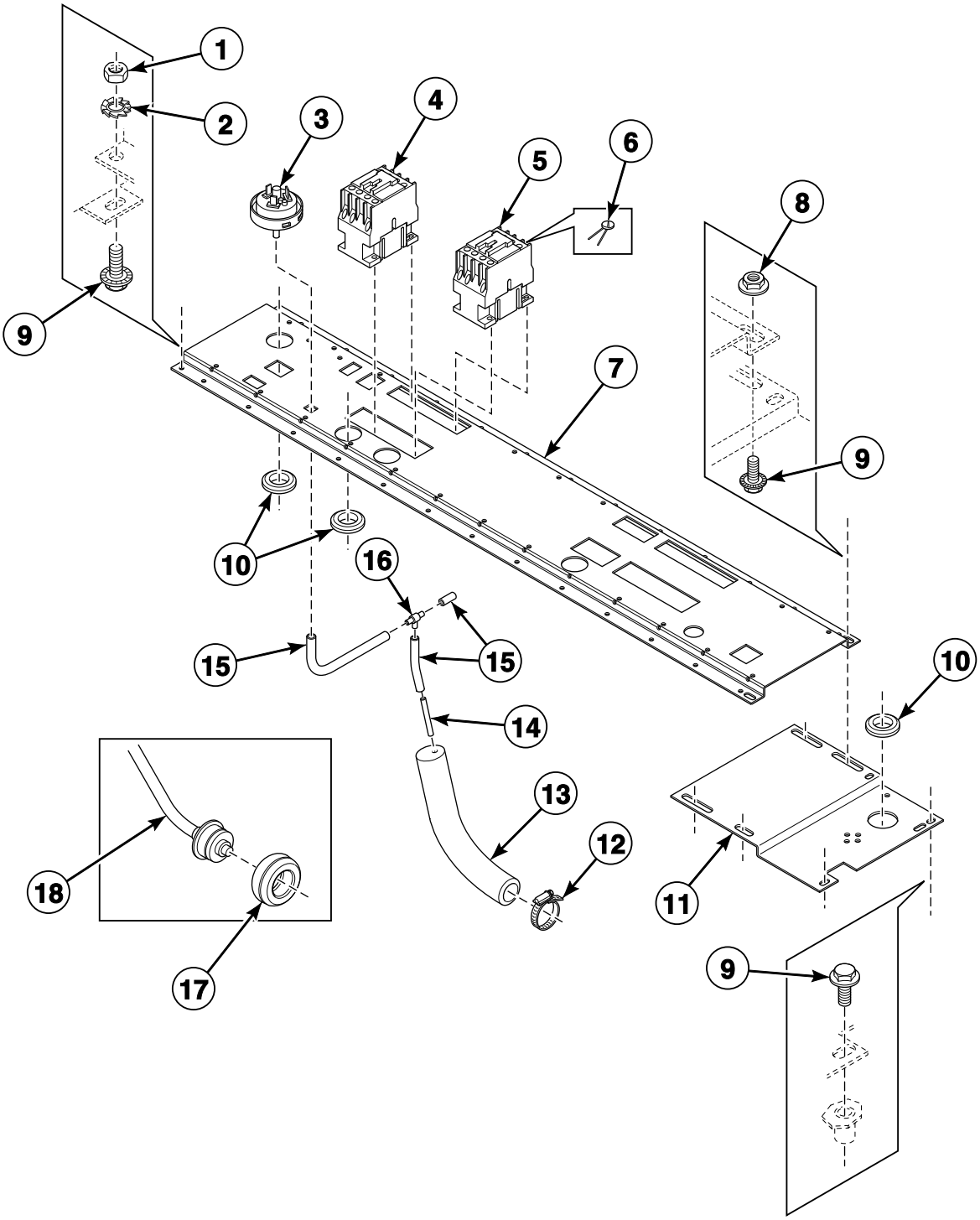

CFD75P_D0237

© Copyright, Alliance Laundry Systems LLC – DO NOT COPY or TRANSMIT

Control Module - *50, *55, *176 and *234 Models

REF	PART NO.	DESCRIPTION	COMMENTS
1	204/00005/00	Nut	
2	203/00004/00	Washer	
3	209/00007/50	Pressure Switch	1 level
4	209/00041/04	Contactor	Heating
5	209/00148/02	Contactor	
6	209/00356/00	Noise Suppressor	
7	111/00197/30	Electrical Components Plate	*50, *55 and *234 models
	111/01019/10	Mounting Plate	*176 models; For electrical components
8	206/00101/00	Nut	
9	206/00099/00	Bolt	
10	223/00198/00	Grommet	
11	140/00021/00	Electrical Component Extension Plate	
12	223/00011/00	Hose Clamp	
13	223/00210/00	Pressure Switch Elbow	
14	223/00016/00	Hose Barb	
15	223/00212/00	Pressure Switch Hose	
16	223/00173/10	Pressure Switch Hose Tee	For safety water level switch
17	225/10004/00	Thermostat Seal	For temperature sensor
18	210/01064/16	Thermostat	

© Copyright, Alliance Laundry Systems LLC – DO NOT COPY or TRANSMIT

Control Module - *75 and *304 Models

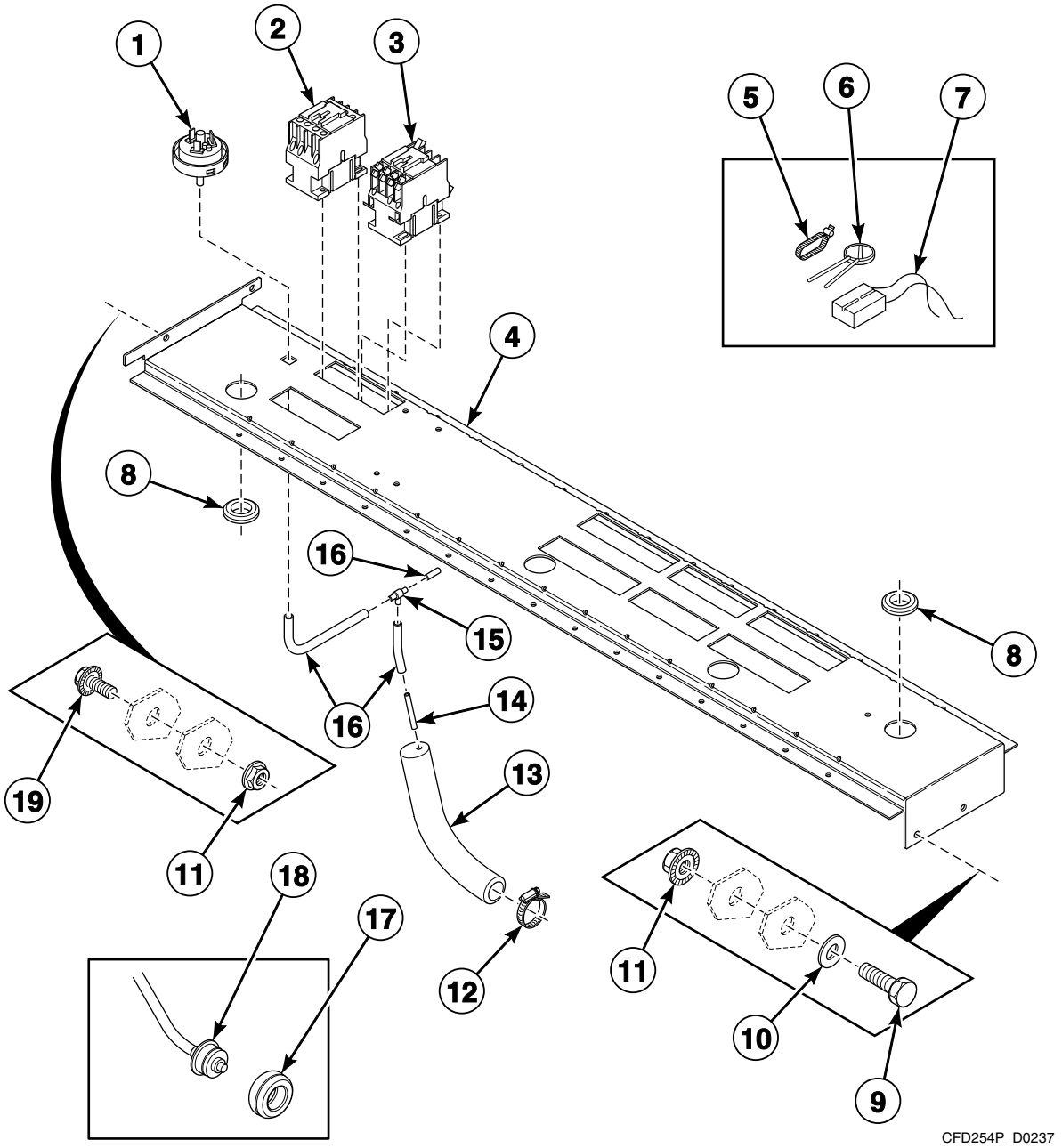

© Copyright, Alliance Laundry Systems LLC – DO NOT COPY or TRANSMIT

Control Module - *75 and *304 Models

REF	PART NO.	DESCRIPTION	COMMENTS
1	209/00007/50	Pressure Switch	1 level
2	209/00041/04	Contactor	Heating
3	209/00148/02	Contactor	
4	111/01028/00	Electrical Components Plate	
5	211/00108/00	Fastener	Nylon
6	209/00356/00	Noise Suppressor	
7	209/00320/01	Varistor	
8	223/00198/00	Grommet	
9	205/00107/00	Bolt	
10	202/00101/00	Washer	
11	206/00101/00	Nut	
12	223/00011/00	Hose Clamp	
13	223/00210/00	Pressure Switch Elbow	
14	223/00016/00	Hose Barb	
15	223/00173/10	Pressure Switch Hose Tee	For safety water level switch
16	223/00212/00	Pressure Switch Hose	
17	225/10004/00	Thermostat Seal	For temperature sensor
18	210/01064/16	Thermostat	Cygnus control models
	210/01304/16	Thermostat	All other models
19	206/00099/00	Bolt	

© Copyright, Alliance Laundry Systems LLC – DO NOT COPY or TRANSMIT

Balance Switch

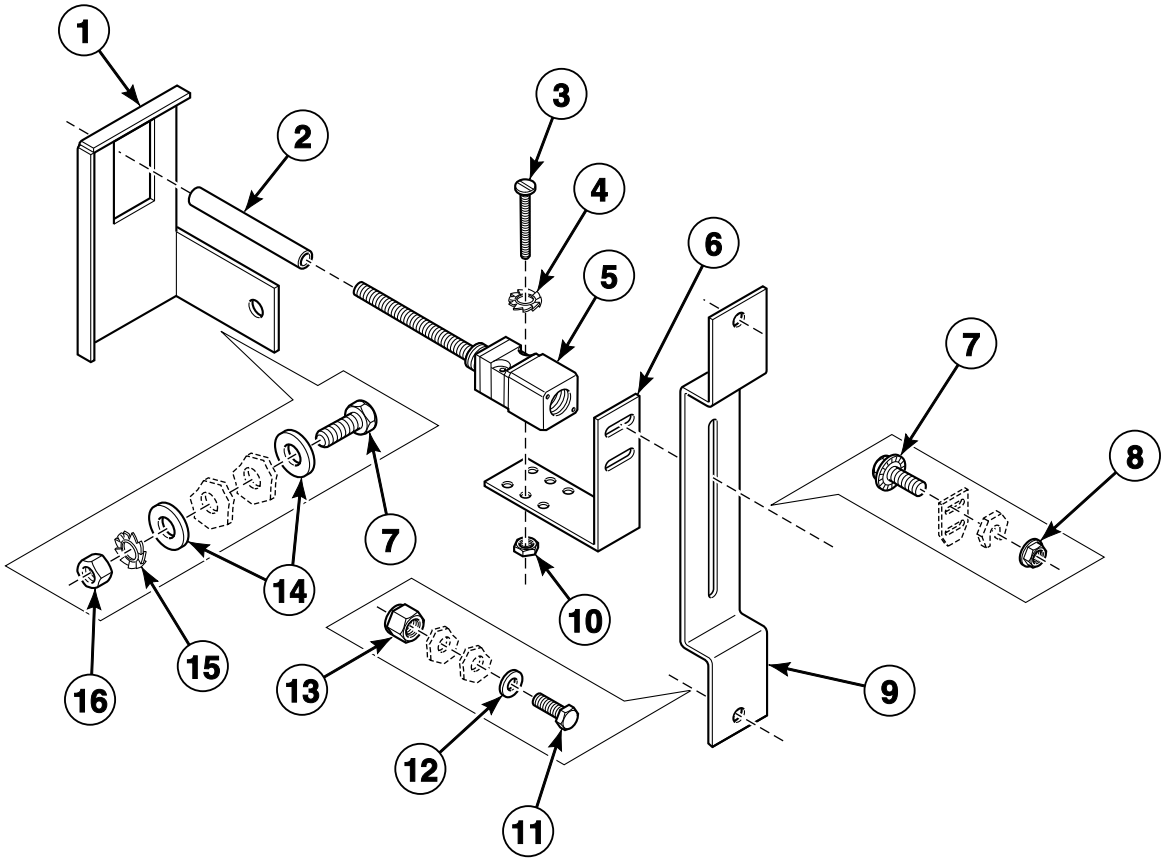

CFD28P_D0237

© Copyright, Alliance Laundry Systems LLC – DO NOT COPY or TRANSMIT

Balance Switch

REF	PART NO.	DESCRIPTION	COMMENTS
1	111/32959/00	Out-of-Balance Switch Bracket	
2	223/00246/00	Out-of-Balance Switch Boot	
3	207/00018/00	Screw	
4	203/00006/00	Washer	
5	209/00255/00	Out-of-Balance Switch	
6	111/00107/00	Tilt Switch Bracket	
7	206/00099/00	Bolt	
8	206/00101/00	Nut	
9	111/00255/01	Out-of-Balance Switch Bracket	
10	204/00007/00	Nut	
11	205/00107/00	Bolt	
12	202/00101/00	Washer	
13	204/00009/00	Nut	
14	201/00010/00	Washer	
15	203/00003/00	Washer	
16	204/00004/00	Nut	

© Copyright, Alliance Laundry Systems LLC – DO NOT COPY or TRANSMIT

Supply Dispenser (Drawing 1 of 5)

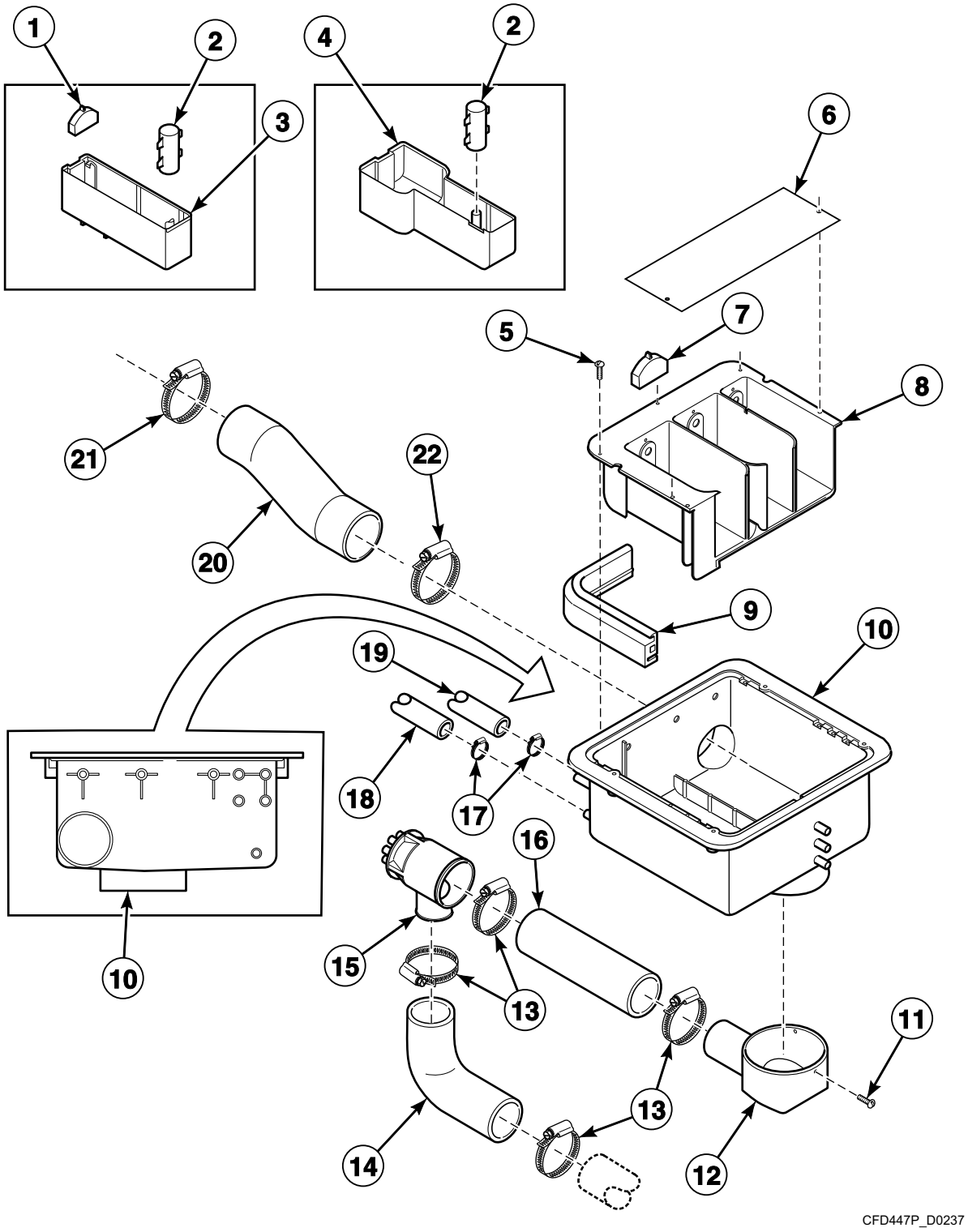

© Copyright, Alliance Laundry Systems LLC – DO NOT COPY or TRANSMIT

Supply Dispenser (Drawing 1 of 5)

REF	PART NO.	DESCRIPTION	COMMENTS
1	223/00102/05	Softener Spray Nozzle	
2	223/00102/04	Soap Dispenser Rinse Siphon	
3	223/00102/03	Rinse Insert	
4	223/00102/08	Liquid Soap Dispenser Insert	
5	B12347501	Screw	
6	123/00107/00	Anti-Splash Plate	Sigma control models
	123/00103/06	Soap Box Assembly Plate	All other models
7	223/00102/06	Soap Spray Nozzle	
8	N/A	Soap Dispenser Insert	
9	223/00109/00	Soap Dispenser Gasket	
10	223/00102/30	Soap Dispenser Assembly	
	223/00102/60	Dispenser Assembly	
11	B12350903	Screw	
12	223/00196/00	Dispenser Drain Funnel	
13	223/00071/00	Hose Clamp	
14	B12322402	Siphon Break Hose	*50, *75, *176 and *304 models
	B12322401	Siphon Break Hose	*55 and *234 models
15	223/00249/00	Liquid Soap Manifold	
16	223/00263/00	Siphon Break Dispenser Hose	*50, *55, *176 and *234 models
	223/00264/00	Siphon Break Dispenser Hose	*75 and *304 models
17	223/00010/00	Hose Clamp	
18	223/00044/01	Water Hose	Diameter 13 mm; Per meter
19	223/00059/00	Water Hose	Diameter 20 mm; Per meter
20	223/00107/06	Vent Hose	
	223/00107/01	Ventilating Hose	
21	223/00014/00	Hose Clamp	

N/A = Part no longer available

© Copyright, Alliance Laundry Systems LLC – DO NOT COPY or TRANSMIT

Supply Dispenser (Drawing 2 of 5)

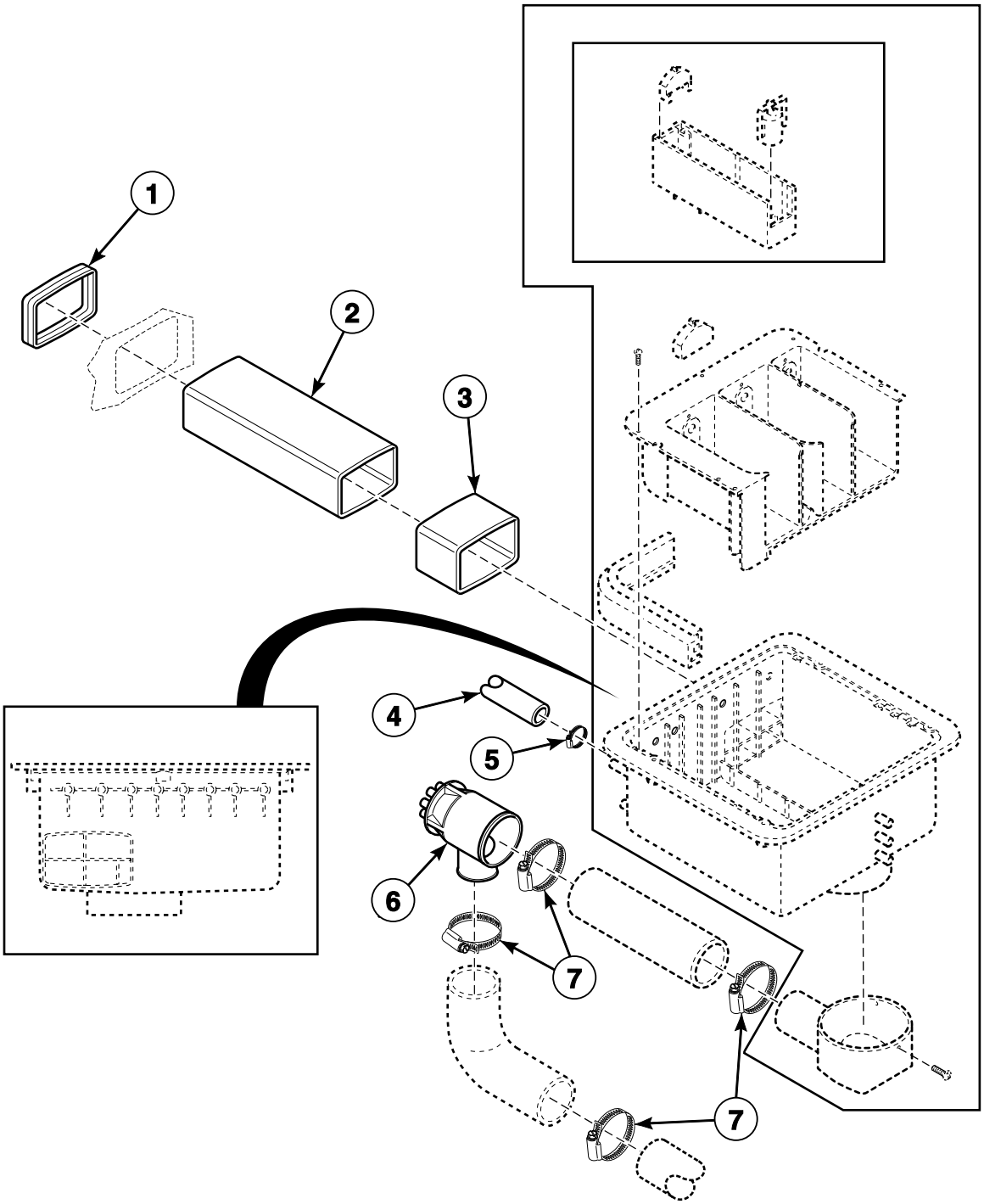

CFD255P_D0237

© Copyright, Alliance Laundry Systems LLC – DO NOT COPY or TRANSMIT

Supply Dispenser (Drawing 2 of 5)

REF	PART NO.	DESCRIPTION	COMMENTS
1	223/00226/00	Vent Tube	
2	223/00229/00	Vent Tube	
3	223/00245/00	Shrink Fit	
4	223/00044/00	Water Hose	Diameter 13 mm; Per meter
	223/00059/00	Water Hose	Diameter 20 mm; Per meter
5	223/00010/00	Hose Clamp	
6	223/00249/00	Liquid Soap Manifold	*50, *55, *176 and *234 models
	223/00250/00	Liquid Soap Manifold	*75 and *304 models
7	223/00071/00	Hose Clamp	*50, *55, *176 and *234 models
	223/00013/00	Hose Clamp	*75 and *304 models

© Copyright, Alliance Laundry Systems LLC – DO NOT COPY or TRANSMIT

Supply Dispenser (Drawing 3 of 5)

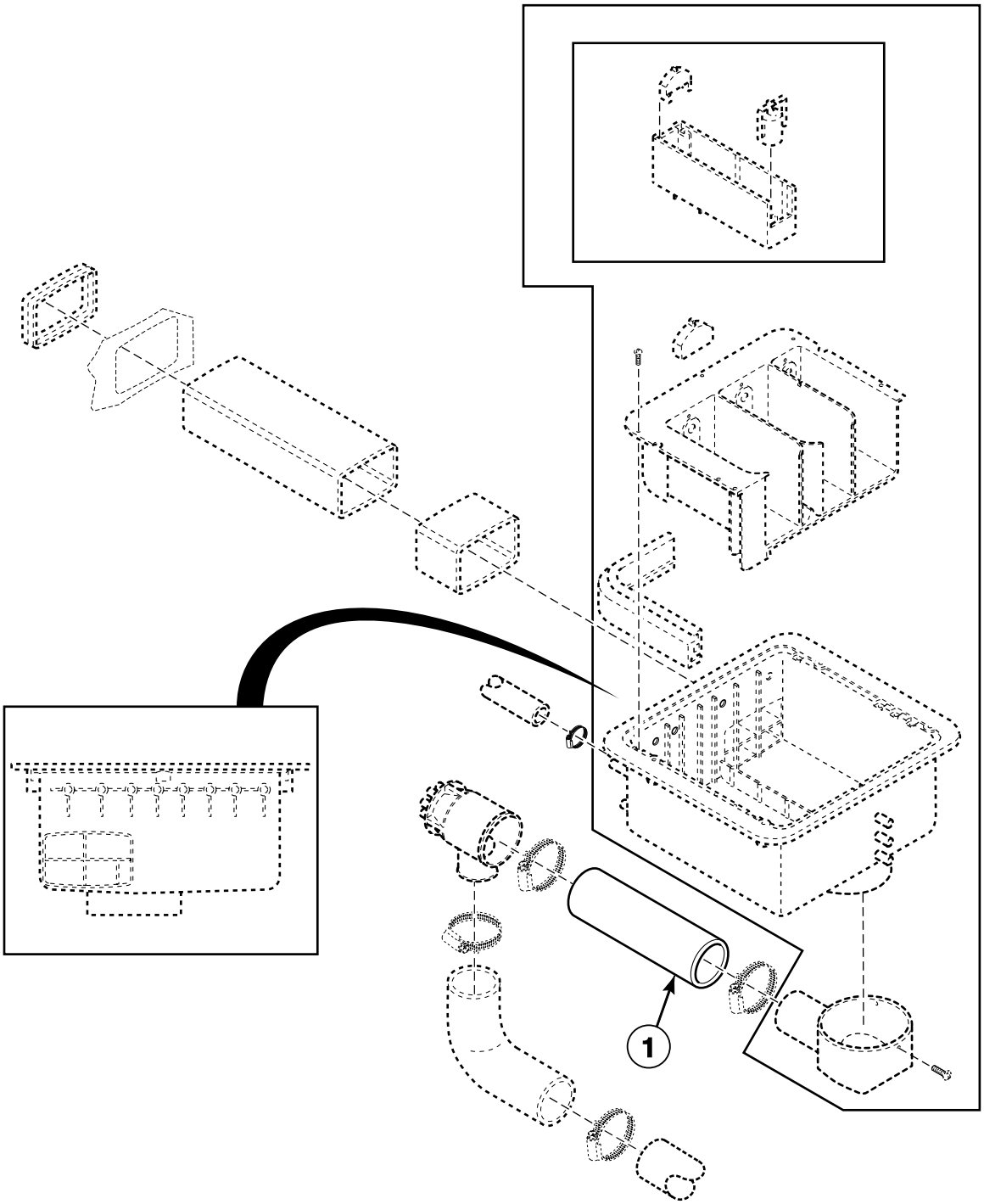

CFD255PB_D0237

© Copyright, Alliance Laundry Systems LLC – DO NOT COPY or TRANSMIT

Supply Dispenser (Drawing 3 of 5)

REF	PART NO.	DESCRIPTION	COMMENTS
1	223/00264/00	Siphon Break Dispenser Hose	*50, *55, *176 and *234 models
	223/00263/00	Siphon Break Dispenser Hose	*50, *55, *176 and *234 models
	223/00260/00	Siphon Break Dispenser Hose	*75 and *304 models
	223/00261/00	Soap Dispenser Hose	*75 and *304 models
	223/00262/00	Siphon Break Dispenser Hose	*75 and *304 models

© Copyright, Alliance Laundry Systems LLC – DO NOT COPY or TRANSMIT

Supply Dispenser (Drawing 4 of 5)

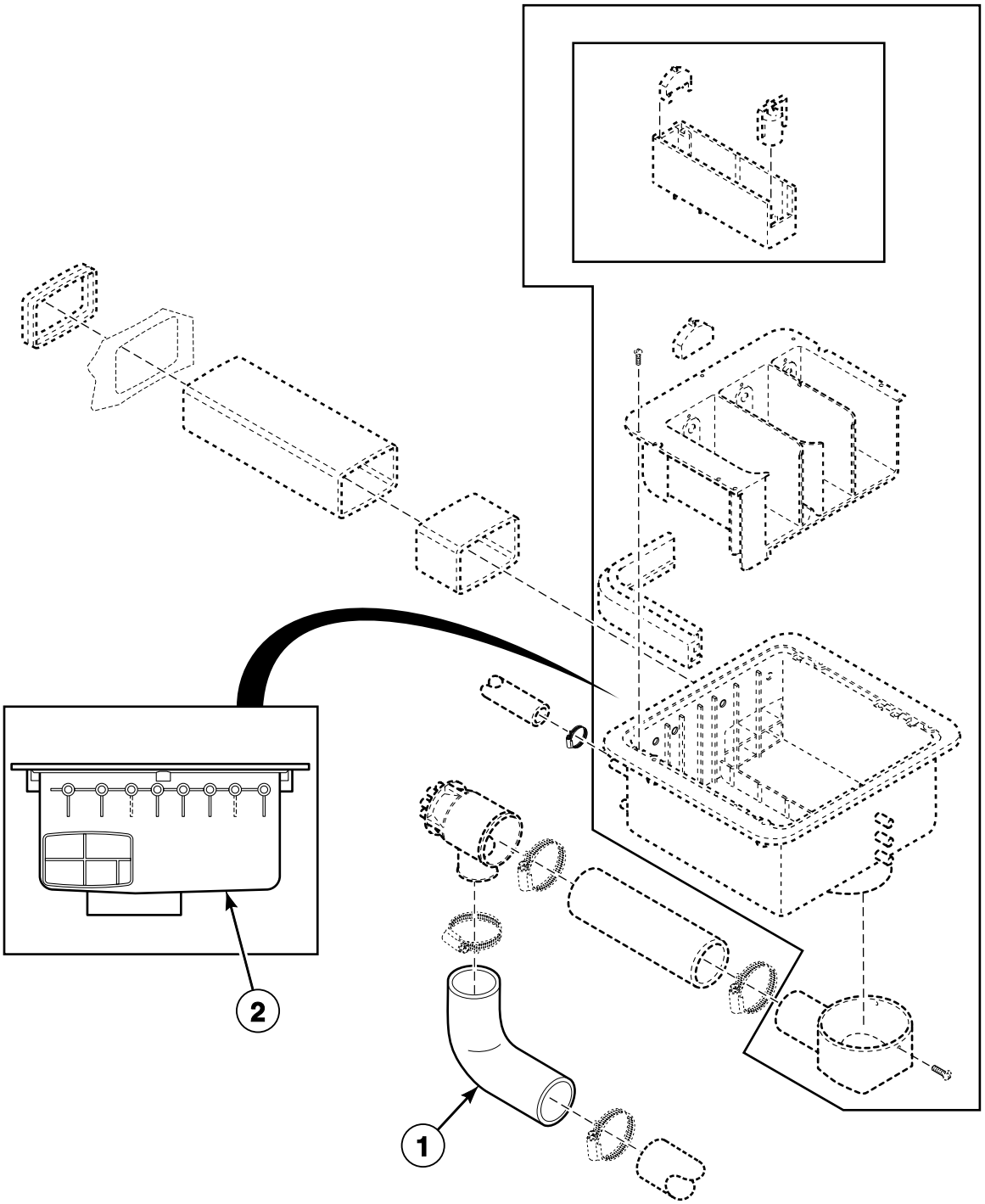

CFD255PC_D0237

© Copyright, Alliance Laundry Systems LLC – DO NOT COPY or TRANSMIT

Supply Dispenser (Drawing 4 of 5)

REF	PART NO.	DESCRIPTION	COMMENTS
1	B12322402	Siphon Break Hose	*50, *75, *176 and *304 models
	B12322401	Siphon Break Hose	*55 and *234 models
2	223/00222/60	Outer and Inner Box Kit	

© Copyright, Alliance Laundry Systems LLC – DO NOT COPY or TRANSMIT

Supply Dispenser (Drawing 5 of 5)

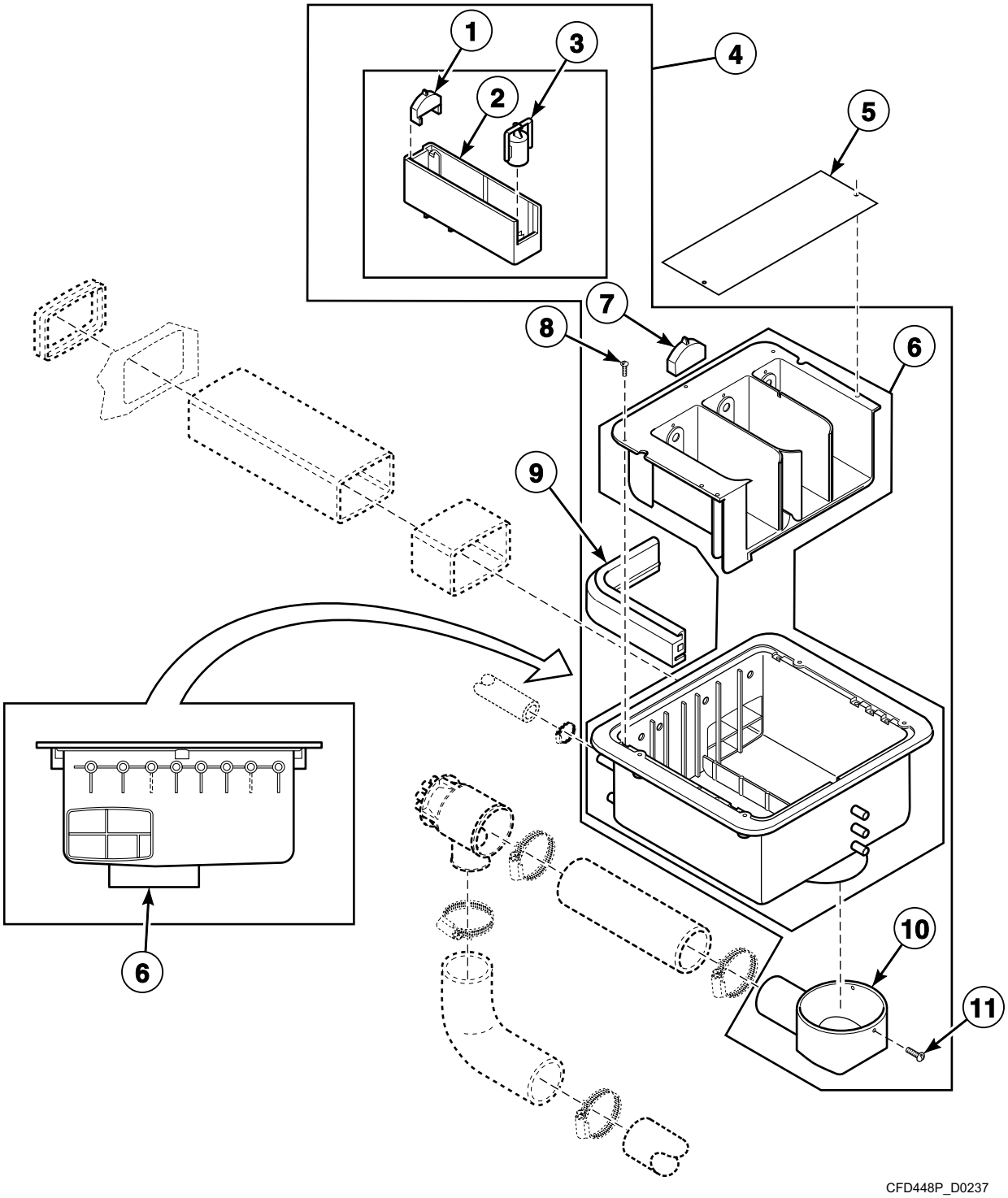

© Copyright, Alliance Laundry Systems LLC – DO NOT COPY or TRANSMIT

Supply Dispenser (Drawing 5 of 5)

REF	PART NO.	DESCRIPTION	COMMENTS
1	223/00222/03	Softener Spray Nozzle	
2	223/00222/05	Rinsing Box	
3	223/00222/04	Siphon Break	
4	223/00240/00	Soap Dispenser	*50, *55, *176 and *234 models
	223/00222/00	Soap Dispenser	*75 and *304 models
5	123/00107/00	Anti-Splash Plate	Sigma control models
	123/00103/06	Soap Box Assembly Plate	All other models
6	223/00222/60	Outer and Inner Box Kit	
7	223/00102/06	Soap Spray Nozzle	
8	B12347501	Screw	
9	223/00109/00	Soap Dispenser Gasket	
10	223/00196/00	Dispenser Drain Funnel	*50, *55, *176 and *234 models
	223/00195/00	Dispenser Drain Funnel	*75 and *304 models
11	B12350903	Screw	

© Copyright, Alliance Laundry Systems LLC – DO NOT COPY or TRANSMIT

Steam and Electric Heating Options

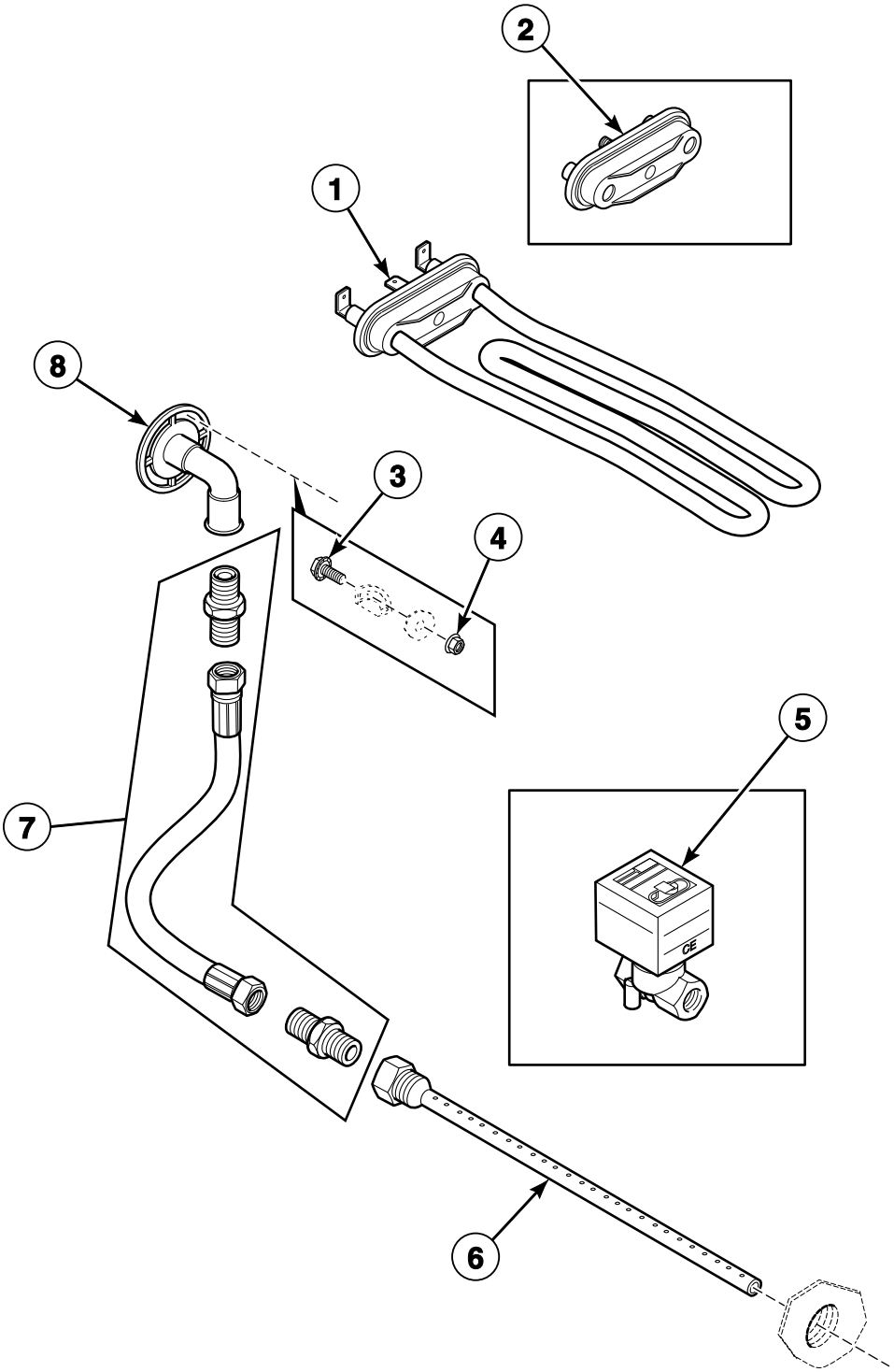

CFD29P_D0237

© Copyright, Alliance Laundry Systems LLC – DO NOT COPY or TRANSMIT

Steam and Electric Heating Options

REF	PART NO.	DESCRIPTION	COMMENTS
1	209/00581/10	Heating Element	4000 W; 220/240 Volt
	209/00563/20	Heating Element	2000 W; 220/240 Volt
	209/00564/20	Heating Element	1400 W; 220/240 Volt
	209/00562/20	Heating Element	3000 W; 220/240 Volt
2	F360202	Heating Element Plug	
3	206/00099/00	Bolt	
4	206/00101/00	Nut	
5	209/00476/00	Steam Valve	
6	119/00082/00	Steam Injector	300 mm
	117/00039/00	Steam Injector	220 mm
	153/00048/00	Steam Injector	480 mm
7	217/00025/00	Steam Hose	3/8 inch; 400 mm
	217/00026/00	Steam Hose	1/2 inch; 400 mm
8	118/01063/00	Steam Inlet	3/8 inch
	153/01047/00	Steam Inlet	1/2 inch

© Copyright, Alliance Laundry Systems LLC – DO NOT COPY or TRANSMIT

Soap Pump

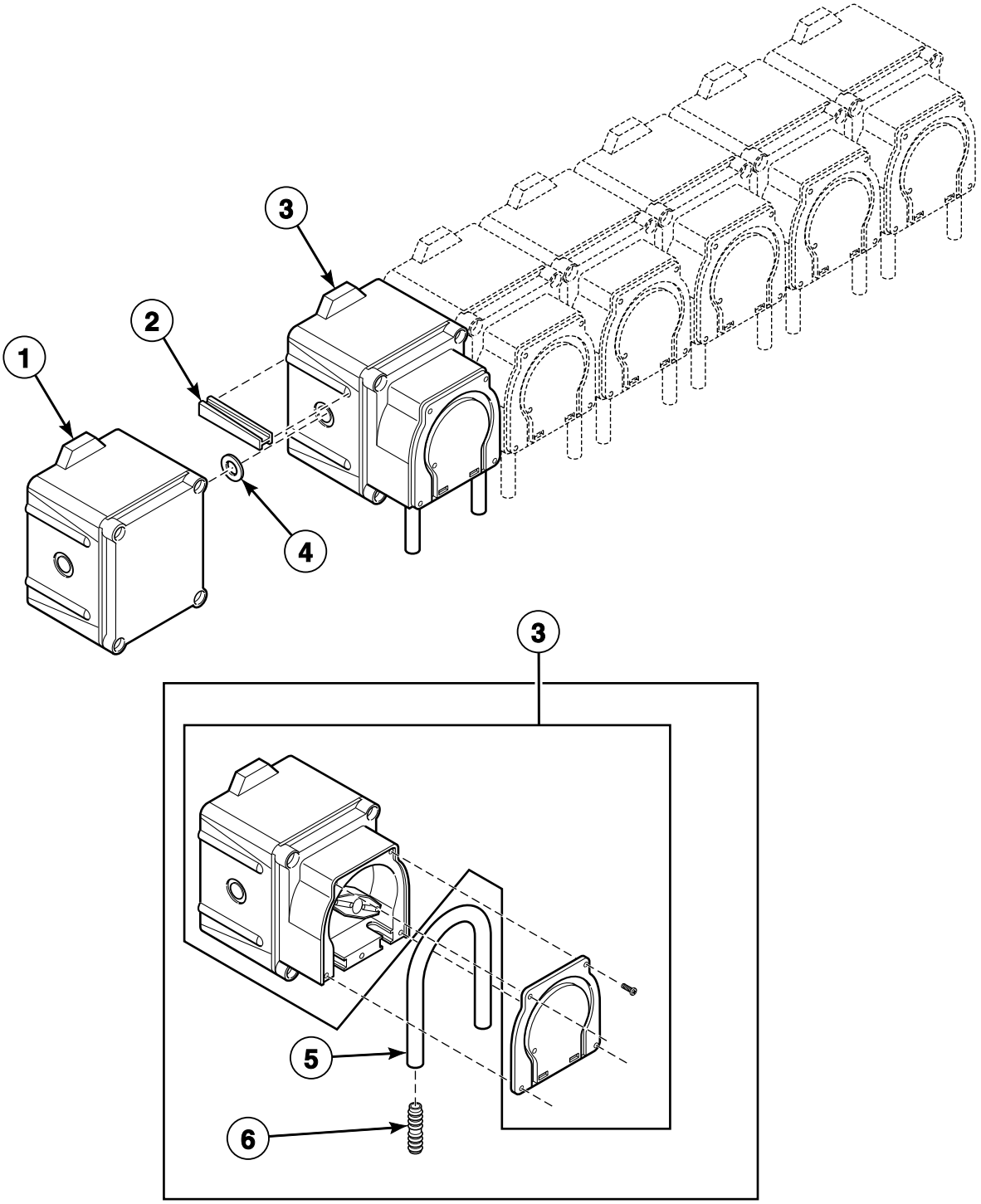

CFD256P_D0237

© Copyright, Alliance Laundry Systems LLC – DO NOT COPY or TRANSMIT

Soap Pump

REF	PART NO.	DESCRIPTION	COMMENTS
1	209/00555/01	Soap Pump Assembly	Feeding plus 1 large pump
	209/00555/02	Soap Pump Assembly	Feeding plus 2 large pumps
	209/00555/03	Soap Pump Assembly	Feeding plus 3 large pumps
	209/00555/04	Soap Pump Assembly	Feeding plus 4 large pumps
	209/00555/05	Soap Pump Assembly	Feeding plus 5 large pumps
	209/00555/06	Soap Pump Assembly	Feeding plus 6 large pumps
	209/00554/51	Feeding Liquid Soap Dosing Pump	
2	209/00554/53	Liquid Soap Dosing Pump Connection Piece	
3	209/00555/50	Liquid Soap Dosing Pump	Large pump
4	209/00554/52	Liquid Soap Dosing Pump O-Ring	
5	209/00555/98	Dosing Pump Hose	
6	209/00555/99	Dosing Pump Hose Connector	

© Copyright, Alliance Laundry Systems LLC – DO NOT COPY or TRANSMIT

Spray Pump

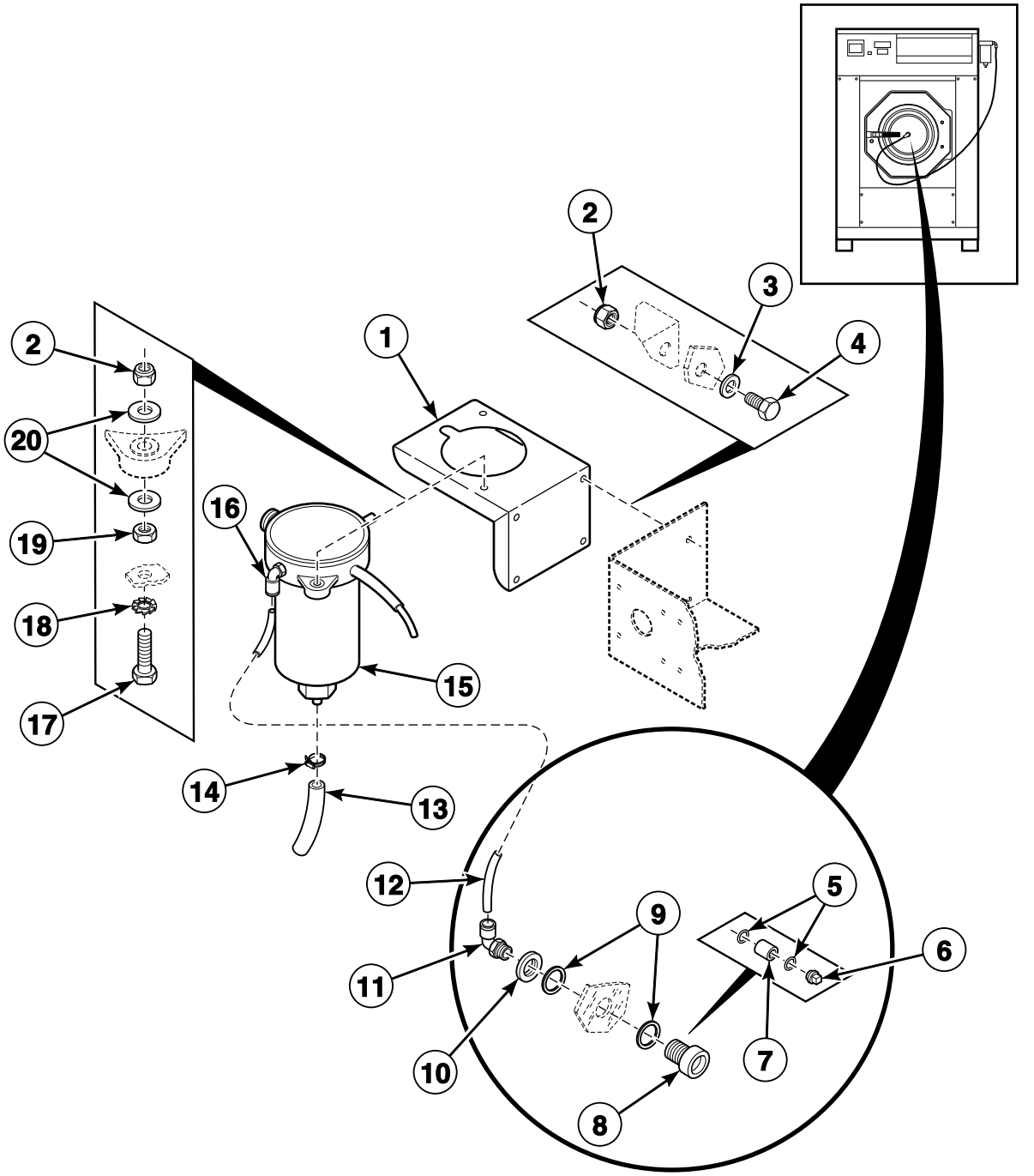

© Copyright, Alliance Laundry Systems LLC – DO NOT COPY or TRANSMIT

Spray Pump

REF	PART NO.	DESCRIPTION	COMMENTS
1	111/10179/00	Spray Pump Mounting Plate	
2	204/00009/00	Nut	
3	201/00007/00	Washer	
4	205/00107/00	Bolt	
5	223/00177/00	O-Ring	
6	223/00178/00	Soap Injector Orifice	
7	211/00126/00	Soap Injector Orifice Nipple	
8	211/00127/00	Soap Injector Connector	
9	223/00176/00	O-Ring	
10	211/10106/00	Nut	
11	223/00182/00	Soap Injector Coupling	
12	223/00180/00	Soap Injector Hose	
13	223/00179/10	Pressure Hose	
14	F140605	Cable Tie	
15	209/00369/00	Liquid Soap Spray Pump	
16	223/00181/00	Soap Injector Elbow Coupling	
17	205/00103/00	Bolt	
18	203/00004/00	Washer	
19	204/00106/00	Nut	
20	202/00101/00	Washer	

© Copyright, Alliance Laundry Systems LLC – DO NOT COPY or TRANSMIT

Notes

© Copyright, Alliance Laundry Systems LLC – DO NOT COPY or TRANSMIT

Parts Index

A

Anti-Splash Plate
- 123/00107/00 ..... 109, 117

B

Backbridge
- 111/01158/35 91
- 111/01158/90 ..... 75, 87, 89
- 111/01166/70 97
- 111/01166/90 ..... 93, 95

Backplate
- 111/01002/00 ..... 71, 73

Ball Bearing
- 212/00004/00 ..... 27, 29, 31

Basket
- B12380901 ..... 21, 33
- B12381001 ..... 21, 33

Basket and Pulley Kit
- B12537901 ..... 25, 35

Basket Kit
- B12543201 21

Bearing
- F100134 ..... 27, 29

Bearing and Seal Kit
- 3884P 29

Bearing Housing Assembly
- 139/10006/00 ..... 27, 29
- 212/00036/00 31
- 212/00036/01 31

Bearing Housing Cover
- 112/00004/00 31

Bearing Replacement Kit
- 891P3 27
- 892P3 31

Bearing Replacement Tool Kit
- 381P3 29
- 385P4 ..... 27, 31

Bearing Spacer
- 232/00020/00 ..... 35, 37

Belt
- 226/00102/01 ..... 33, 39
- 226/00118/00 35
- 226/00149/00 ..... 33, 39
- 226/00151/00 37

Bolt
- 205/00102/00 ..... 27, 29
- 205/00103/00 ..... 19, 25, 43, 45, 47, 49, 75, 77, 79, 81, 123
- 205/00104/00 ..... 27, 29, 31, 51
- 205/00105/00 ..... 75, 77, 79, 81
- 205/00107/00 ..... 105, 107, 123
- 205/00108/00 ..... 87, 93
- 205/00113/00 ..... 89, 91
- 205/00115/00 49
- 206/00003/00 ..... 39, 41
- 206/00004/00 33
- 206/00006/00 ..... 39, 41
- 206/00009/00 ..... 21, 25, 43, 45, 47
- 206/00010/00 31
- 206/00014/00 ..... 95, 97
- 206/00027/00 ..... 81, 89, 91, 95, 97, 99
- 206/00032/00 ..... 21, 25
- 206/00042/00 ..... 75, 77, 79, 81
- 206/00047/00 ..... 31, 41
- 206/00066/00 ..... 21, 25
- 206/00071/00 ..... 19, 25
- 206/00072/00 ..... 39, 41
- 206/00087/00 ..... 13, 17
- 206/00099/00 ..... 75, 77, 79, 81, 83, 85, 87, 89, 91, 93, 95, 97, 103, 105, 107, 119
- 206/00122/00 31
- 206/00136/00 ..... 87, 93
- 206/00153/00 ..... 11, 13, 15, 17
- 207/00131/00 ..... 83, 85
- 212/00009/02 35
- 224/00046/00 ..... 11, 13, 15, 17
- 248/00114/00 ..... 27, 29

Button
- 209/00099/09 69

C

Cabinet Top Panel
- 111/32961/00 83

Cable Tie
- F140605 123

Caddy Bracket
- 224/00051/00 ..... 27, 29, 31
- 224/00052/00 ..... 27, 29, 31

Central Control Board
- 209/00438/50 99

Circuit Board Cover
- 229/00262/00 ..... 63, 65, 67
- 229/00289/00 ..... 53, 55, 57, 59, 61

Clip
- 224/00052/00 ..... 27, 29

Coin Box
- 254/00077/00 ..... 71, 73

Coin Drop
- B11211209 71
- B12311201 71
- B12311202 71
- B12311203 71
- B12311204 71
- B12311205 71
- B12311206 71
- B12311207 71
- B12311208 71
- B12311210 71
- B12311211 71
- B12311212 71
- B12311214 71
- B12311215 71
- B12311216 71
- B12311218 71
- B12311219 71
- B12311220 71
- B12311221 71
- B12311222 71
- B12311224 71
- B12311225 71

N/A items do not appear in index.

© Copyright, Alliance Laundry Systems LLC – DO NOT COPY or TRANSMIT

B12311226 71
B12311234 71
B12311235 71
B12311239 71
B12311241 71
B12311244 71
B12311247 71
B12311248 71
B12311249 71
B12311252 71
B12311301 71
B12311302 71
B12311304 71
B12311401 73
B12323401 71
B12323901 71

Contact
209/00099/05 69

Contact Block
44018901 ..... 53, 55, 59, 63, 65, 67

Contact Switch
209/00099/06 69

Contactor
209/00041/04 ..... 103, 105
209/00148/02 ..... 103, 105

Control Board
209/00547/00 65

Cooling Fan
209/00287/00 ..... 39, 41, 87, 93

Cordlock
211/00123/00 ..... 89, 91, 95, 97
211/00138/00 ..... 39, 41, 89, 91, 95, 97

Counter Ring
219/00004/00 33
232/00008/00 ..... 35, 37

Counterweight
115/00136/00 25
115/00140/00 19

Cylinder and Shaft Assembly
B12327101 ..... 21, 33

D

Data Card Ribbon Assembly
B12538301 ..... 53, 55, 57, 59, 61

Datacard
209/02022/00 ..... 53, 55, 57, 59, 61

Datacard Cover
223/00348/00 ..... 53, 55

Diaphragm
209/00316/02 ..... 89, 91, 95, 97

Dispenser Assembly
223/00102/60 109

Dispenser Drain Funnel
223/00195/00 117
223/00196/00 ..... 109, 117

Dispenser Front Mounting Plate
111/10101/00 75

Dispenser Mounting Plate
111/00207/00 77

Dispenser Rear Mounting Plate
111/10102/00 75

Display PC-Board
209/02002/00 53

Door
118/00125/00 51

Door Front Panel
111/05015/00 19
111/32945/00 25

Door Glass
B12449801 51

Door Glass Seal
223/00068/00 51

Door Handle
217/00059/00 51

Door Handle Stop
217/00016/00 51

Door Hinge Block
253/00022/00 51

Door Hinge Plate Assembly
111/00003/00 51

Door Hinge Spacer
118/00122/00 51
118/00124/00 51

Door Lock Assembly
217/00052/00A 49
217/00052/01A 49

Door Lock Bracket
217/00052/11 49

Door Lock Microswitch
209/00272/00 49

Door Lock PC-Board
209/02010/00 ..... 53, 55, 57, 59, 61

Door Lock Pin Kit
211/00109/01 51
211/00109/02 49

Door Lock Spacer
217/00052/03 49

Door Lock Spring
224/00049/00 49

Door Release Wire
217/00052/07 49

Door Solenoid
209/00703/50 49

Dosing Pump Hose
209/00555/98 121

Dosing Pump Hose Connector
209/00555/99 121

Drain Pipe
223/00106/00 ..... 43, 45, 47

Drain Tub to Drain Valve Hose
223/00133/00 ..... 43, 45

Drain Valve
209/00075/00 ..... 43, 45, 47
209/00171/00 45

Drain Valve Overflow Plug
223/00086/00 ..... 43, 45, 47

Drain Valve Plate Assembly
114/00010/00 ..... 43, 45, 47

Drain Valve to Drain Pipe Hose
223/00135/00 43
223/00141/00 ..... 45, 47

Drive
F8421105 87
F8421106 87
F8421107 87
F8421108 87
F8421109 93

N/A items do not appear in index.

© Copyright, Alliance Laundry Systems LLC – DO NOT COPY or TRANSMIT

F8421110 93
F8421111 93
F8421112 93

Drum
B12327301 ..... 25, 37
123/10011/00 ..... 21, 33

Dual Drop Optical Sensor Kit
B12388102 71

E

Electrical Component Extension Plate
140/00021/00 103

Electrical Components Plate
111/00197/30 103
111/01028/00 105

Electrical Connection Plate
111/00094/10 ..... 89, 91, 95, 97
111/00188/06 ..... 95, 97, 99

Electrical Connection Sticker
229/00068/02 ..... 89, 91, 95, 97

Electronic Coin Meter Housing
152/00112/50 73

Emergency Switch Pushbutton
209/00099/20 ..... 53, 55, 59

Eprom
209/00266/01 63

Exhaust Valve Hose
223/00170/00 47

F

Fastener
211/00108/00 105

Fastening Piece
217/00060/00 ..... 71, 73

Feeding Liquid Soap Dosing Pump
209/00554/51 121

Filter
209/00385/00 ..... 89, 91, 95, 97
209/00385/01 ..... 89, 91, 95, 97
227/00177/00 101
227/00179/00 101
227/00180/00 101

Frame
114/00018/50 9
114/00019/50 7

Front Panel
111/01708/00 67
131/00002/00 25

Front Plate
111/01000/00 ..... 71, 73

Fuse
209/00372/01 67
209/00439/00 ..... 63, 65
209/00468/00 99

Fuse Holder
209/00202/00 99

G

Gasket
246/00092/00 ..... 19, 25
246/00149/00 ..... 75, 77, 79, 81

Grease Ring
212/00007/00 31

Grommet
223/00174/00 ..... 87, 93
223/00198/00 ..... 103, 105
223/00203/00 99

Ground Terminal
210/10015/00 49

H

Heating Element
209/00562/20 119
209/00563/20 119
209/00564/20 119
209/00581/10 119

Heating Element Plug
F360202 119

Hinge
221/00004/00 51

Hose Barb
223/00016/00 ..... 103, 105

Hose Clamp
F200205 ..... 89, 91, 95, 97
223/00010/00 ..... 109, 111
223/00011/00 ..... 89, 91, 95, 97, 103, 105
223/00012/00 ..... 43, 45, 47
223/00013/00 ..... 43, 45, 47, 111
223/00014/00 109
223/00071/00 ..... 43, 45, 47, 109, 111

Hose Vent
223/00102/07 ..... 89, 95

I

Infrared Cable
210/00902/00 ..... 53, 55, 65, 67

Inlet Valve Solenoid
209/00090/01 ..... 89, 91, 95, 97

Inlet Valve, 2-Way
209/00316/00 ..... 89, 91, 95, 97
209/00419/00 ..... 89, 91

Input Block
209/00683/00 73

Insulating Sticker
229/00255/00 ..... 63, 65, 67
229/00268/00 53
229/00291/00 ..... 55, 57

Interlock Coil Spring
224/00043/00 49

Interlock Lever
217/00052/04 49

Intermediate Fan Motor Plate
111/00243/00 39

Inverter
227/00133/00 93

N/A items do not appear in index.

© Copyright, Alliance Laundry Systems LLC – DO NOT COPY or TRANSMIT

227/00134/00 93
227/00169/00 87
227/00224/00 93
227/00230/00 87
227/00231/00 93
227/00238/00 87

Inverter Box Cover
111/01158/11 ..... 87, 93

Inverter Drive Box
111/01149/00 93
111/01150/00 87

Inverter Kit
F8421005 87
F8421006 87
F8421007 87
F8421008 87
F8421009 93
F8421010 93
F8421011 93
F8421012 93

Inverter to Motor Harness
210/38729UL/15 93

K

Key
212/00026/00 ..... 33, 35, 37
254/00077/02 ..... 71, 73

Keyboard
209/00323/01 69

Keypad
209/00552/01 67

Keypad Sticker
225/00407/00 63

Kickplate
111/32943/00 ..... 75, 77, 79, 81

L

Label
225/00397/00 67
229/00245/00 69

Left Front Panel
111/32948/00 ..... 77, 79, 81
111/32951/50 75

Lever Spring
224/00040/00 49

Light Microswitch
209/00273/00 49

Lip Seal
B12332301 29

Liquid Soap Dispenser Insert
223/00102/08 109

Liquid Soap Dosing Pump
209/00555/50 121

Liquid Soap Dosing Pump Connection Piece
209/00554/53 121

Liquid Soap Dosing Pump O-Ring
209/00554/52 121

Liquid Soap Manifold
223/00249/00 ..... 87, 93, 109, 111
223/00250/00 111

Liquid Soap Spray Pump
209/00369/00 123

Lock Shaft
217/00017/03 49

Lubricator
212/00002/00 31

M

Main Board
B12351701 67

Mechanical Coin Meter Housing
152/00112/00 71

Memory Card PC-Board
209/02013/00 ..... 53, 55, 57, 59, 61

Metal Disc
202/00120/00 ..... 65, 67

Motor
B12510401 41
B12510901 39

Motor Plate
115/00155/00 39
115/10117/00 41
115/10126/00 39

Mounting Plate
111/01019/10 103
173/00012/00 69
223/00374/00 ..... 53, 55, 57, 59, 61

N

Network Connection Printboard
209/00540/00 99

Noise Filter
227/00163/00 93
227/00242/00 101

Noise Suppressor
209/00356/00 ..... 103, 105

Nut
204/00004/00 ..... 35, 37, 43, 45, 47, 107
204/00005/00 ..... 77, 79, 81, 103
204/00007/00 ..... 41, 75, 87, 99, 107
204/00008/00 ..... 49, 69, 71, 73
204/00009/00 ..... 21, 25, 49, 75, 77, 79, 81, 107, 123
204/00012/00 ..... 11, 13, 15, 17, 41
204/00016/00 ..... 11, 13, 15, 17
204/00019/00 ..... 11, 13, 15, 17, 39
204/00103/00 51
204/00106/00 ..... 43, 45, 47, 51, 75, 77, 79, 81, 123
204/00107/00 93
204/00109/00 ..... 21, 25, 75, 77, 79, 81
204/00111/00 ..... 21, 39, 41
204/00113/00 ..... 11, 13, 15, 17, 19, 25, 27, 29, 31, 39, 41
204/00114/00 ..... 41, 65, 81, 87, 93
204/00115/00 39
204/00116/00 ..... 53, 55, 57, 59, 61, 63, 67, 69, 71, 73
204/00201/00 ..... 89, 91, 95, 97
206/00101/00 ..... 75, 77, 103, 105, 107, 119
208/00002/00 73
208/00104/00 ..... 83, 85
211/10106/00 123

N/A items do not appear in index.

© Copyright, Alliance Laundry Systems LLC – DO NOT COPY or TRANSMIT

O

Operating Sticker
225/00400/00 67
225/00404/00 65
225/00405/00 65
225/00408/00 63
225/10305/00 61
225/10306/00 61
225/10307/00 59
225/10308/00 59
225/10313/00 53
225/10403/00 57
225/10404/00 55
225/10405/00 55
225/10426/00 53
225/10427/00 55

Optic Cable
210/00901/00 ..... 57, 59, 61

Optical Switch
209/00781/00 71

O-Ring
217/00002/00 27
217/00021/00 51
223/00176/00 123
223/00177/00 123

Outer and Inner Box Kit
223/00222/60 ..... 115, 117

Outlet Pipe Plate Assembly
101/00007/00 ..... 43, 45, 47, 75, 77, 79, 81

Out-of-Balance Switch
209/00255/00 107

Out-of-Balance Switch Boot
223/00246/00 107

Out-of-Balance Switch Bracket
111/00255/01 107
111/32959/00 107

Overflow Hose
223/00131/00 ..... 43, 45, 47

P

Parameter Unit Assembly
F8410901 ..... 87, 93
227/00171/00 ..... 87, 93

Plexi Frame
225/00316/00 ..... 63, 65
225/00321/00 53
225/00322/00 ..... 59, 61
225/00323/00 ..... 55, 57

Pressure Hose
223/00179/10 ..... 87, 93, 123

Pressure Switch
209/00007/50 ..... 103, 105

Pressure Switch Elbow
223/00210/00 ..... 103, 105

Pressure Switch Hose
223/00212/00 ..... 103, 105

Pressure Switch Hose Tee
223/00173/10 ..... 103, 105

Prewash and Mainwash Nozzle
223/00001/04 ..... 89, 91, 95, 97

Printboard
209/00440/00 63
209/02001/02 ..... 59, 61
209/02015/02 ..... 55, 57

Printboard Separator
211/00128/00 ..... 53, 55, 57, 59, 61

Printboard Support Card
111/01893/00 ..... 53, 55

Programming Key Contact Switch
209/00326/20 67

Programming Key Kit
938P3 69

Protection LED
223/00330/00 ..... 59, 61

Pulley
185/00086/00 39
226/00105/00 39
226/00117/00 41
226/00148/00 33
226/00150/00 37
226/00152/00 41
239/00013/00 ..... 33, 35, 37
253/00025/01 35

Pulley Hub
212/00009/01 ..... 35, 37

Pulleys and Belt Kit
967P3 33

Pushbutton
209/00396/00 ..... 71, 73
44018801 ..... 59, 63, 65, 67

R

Rear Panel
111/00126/10 85
111/00127/10 83

Retainer Ring
212/00006/00 ..... 27, 29, 31
212/00037/00 ..... 27, 29

Retaining Ring
117/00042/00 39

Right Front Panel
111/32957/50 75
111/32960/00 ..... 77, 79, 81

Rinse Insert
223/00102/03 109

Rinsing Box
223/00222/05 117

Rivet
208/00017/00 ..... 89, 91, 95, 97
211/00093/00 ..... 89, 91, 95, 97

Roller Bearing
212/00005/00 ..... 31, 35, 37

S

Screw
B12347501 ..... 109, 117
B12350903 ..... 109, 117
B12500801 51
206/00049/00 39
206/00056/00 ..... 37, 41
206/00111/00 ..... 21, 25

N/A items do not appear in index.

© Copyright, Alliance Laundry Systems LLC – DO NOT COPY or TRANSMIT

206/00166/00 79
207/00002/00 39
207/00009/00 49
207/00018/00 107
207/00025/00 69
207/00031/00 ..... 41, 99
207/00032/00 75
207/00101/00 ..... 75, 77, 79, 81
207/00108/00 69
207/00110/00 ..... 35, 37
207/00126/00 51
207/00135/00 49
208/00014/00 73
208/00130/00 ..... 87, 93

Seal Holder Assembly
119/00001/01 27
131/00035/01 31

Seal Plate
119/00001/00 27

Seal Plate Assembly
B12333701 ..... 27, 29

Shaft Seal
132/00009/00 ..... 35, 37
219/00003/00 27

Shock Absorber
247/00008/00 ..... 11, 13, 15, 17

Shock Absorber Service Kit
B12419101 ..... 11, 13
B12460901 17

Shrink Fit
223/00245/00 111

Side Panel
111/32727/00 ..... 75, 83
133/00126/00 ..... 77, 79, 81, 85
140/00007/00 ..... 75, 83

Side Panel Gasket
246/00079/00 ..... 77, 79, 81, 85

Single Drop Optical Sensor Kit
B12388101 71

Siphon Break
223/00222/04 117

Siphon Break Dispenser Hose
223/00260/00 113
223/00262/00 113
223/00263/00 ..... 109, 113
223/00264/00 ..... 109, 113

Siphon Break Hose
B12322401 ..... 109, 115
B12322402 ..... 109, 115

Soap Box Assembly Plate
123/00103/06 ..... 109, 117

Soap Box Support Plate
111/00117/00 77

Soap Dispenser
223/00222/00 117
223/00240/00 117

Soap Dispenser Assembly
223/00102/30 109

Soap Dispenser Cover
223/00103/01 ..... 83, 85

Soap Dispenser Cover Hinge Rod
223/00103/04 ..... 83, 85

Soap Dispenser Frame
223/00103/03 ..... 83, 85

Soap Dispenser Gasket
223/00109/00 ..... 109, 117

Soap Dispenser Hose
223/00261/00 113

Soap Dispenser Rinse Siphon
223/00102/04 109

Soap Injection PCB with Fuse
209/00218/13 99

Soap Injector Connector
211/00127/00 123

Soap Injector Coupling
223/00182/00 123

Soap Injector Elbow Coupling
223/00181/00 123

Soap Injector Hose
223/00180/00 123

Soap Injector Orifice
223/00178/00 123

Soap Injector Orifice Nipple
211/00126/00 123

Soap Pump Assembly
209/00555/01 121
209/00555/02 121
209/00555/03 121
209/00555/04 121
209/00555/05 121
209/00555/06 121

Soap Spray Nozzle
223/00102/06 ..... 109, 117

Softener Spray Nozzle
223/00102/05 109
223/00222/03 117

Spacer
115/00151/00 ..... 19, 25

Speed Detector
209/00400/00 ..... 27, 29, 31

Spray Pump Mounting Plate
111/10179/00 123

Standoff
211/00120/00 99
211/00122/00 ..... 53, 55, 57, 63, 65, 67
211/00145/00 ..... 53, 55

Steam Hose
217/00025/00 119
217/00026/00 119

Steam Injector
117/00039/00 119
119/00082/00 119
153/00048/00 119

Steam Inlet
118/01063/00 119
153/01047/00 119

Steam Valve
209/00476/00 119

Support
B12418401 ..... 13, 17
B12455301 17
B12455401 17

Support Bracket
B12456101 81
B12456201 81
111/00207/11 79

Suspension Spring
B12440101 15
B12456301 ..... 11, 13, 17

N/A items do not appear in index.

© Copyright, Alliance Laundry Systems LLC – DO NOT COPY or TRANSMIT

Switch
209/00600/01P 71
Switch Base
209/00099/25 67
Switch Knob
209/00099/29 67
Switch Lever
217/00052/05 49

T

Telem Sticker
209/00520/00 ..... 53, 55, 59, 63, 65, 67
Terminal Block
209/00058/00 99
Thermostat
210/01064/16 ..... 103, 105
210/01304/16 105
Thermostat Seal
225/10004/00 ..... 103, 105
Threaded Rod
B12511601 ..... 13, 17
Tilt Switch Bracket
111/00107/00 107
Top Panel
111/01001/00 ..... 71, 73
111/05013/00 85
140/00045/01 83
T-Piece
253/00006/00 47
Transformer
209/00682/00 73
Tub
B12330101 23
B12330201 23
B12330501 25
B12330701 23
119/00243/00 23
119/00245/00 23
119/00246/00 23
119/00248/00 23
119/00250/00 23
119/00251/00 23
119/00253/00 23
119/10208/00 25
119/10210/00 25
Tub Clamp Ring
238/00011/00 21
Tub Front
138/00001/00 19
Tub Front Clamp Ring
231/00010/00 25
Tub Front Gasket
223/00242/00 19
231/00001/00 25
Tub Front Mounting Strap
115/00161/00 21
Tub Front Panel Clip
217/00008/00 ..... 19, 25
Tub Mounting Strap
137/00008/00 21
Tub Strap
131/00010/00 25
Tub Support
115/00118/00 9
115/00144/00 7
Tub Tightening Ring
115/00163/00 25

U

Upper Front Panel
111/01706/00 ..... 63, 65, 75
111/01712/00 ..... 63, 65, 77, 79, 81
111/01714/00 67
111/01908/00 59
111/01909/00 61
111/01910/00 55
111/01911/00 57
150/01812/00 53

V

Varistor
209/00320/01 105
Vent Hose
223/00107/06 109
Vent Tube
223/00226/00 ..... 91, 97, 111
223/00229/00 111
Ventilating Hose
223/00107/01 109
Voltage Discharge Decal
B12355001 ..... 87, 93

W

Washer
B12421401 79
201/00001/00 ..... 13, 15, 17, 19, 25, 27, 29, 31, 41
201/00002/00 ..... 39, 89, 91, 95, 97
201/00004/00 ..... 39, 41
201/00006/00 ..... 49, 77, 79, 81
201/00007/00 ..... 21, 25, 123
201/00008/00 69
201/00010/00 ..... 13, 17, 21, 25, 75, 77, 79, 81, 107
201/00011/00 ..... 33, 35, 37
201/00017/00 49
201/00018/00 49
201/00023/00 11
201/00201/00 ..... 27, 29
201/00202/00 ..... 27, 29, 31
20290 ..... 89, 91, 95, 97
202/00002/00 ..... 43, 45, 47
202/00004/00 ..... 69, 75, 81, 87, 89, 91, 93, 95, 97
202/00101/00 ..... 25, 49, 51, 105, 107, 123
202/00104/00 51
202/00111/00 51
202/00112/00 19
202/00124/00 49
203/00001/00 ..... 33, 35, 37
203/00002/00 41
203/00003/00 ..... 31, 43, 45, 47, 107
203/00004/00 ..... 27, 29, 43, 45, 47, 75, 77, 79, 81, 103, 123
203/00005/00 ..... 87, 93

N/A items do not appear in index.

© Copyright, Alliance Laundry Systems LLC – DO NOT COPY or TRANSMIT

203/00006/00 ..... 41, 63, 75, 99, 107
203/00007/00 ..... 49, 69
208/00009/00 ..... 75, 77, 79, 81
223/00051/10 69
223/00123/00 ..... 53, 55, 57, 59, 61, 67, 69
803615 ..... 89, 91, 95, 97

Water Hose
F200164 ..... 89, 91, 95, 97
F200166 ..... 89, 91, 95, 97
223/00044/00 ..... 89, 91, 95, 97, 111
223/00044/01 109
223/00059/00 ..... 89, 91, 95, 97, 109, 111

Water Valve Adapter
223/00050/01 ..... 89, 91, 95, 97

Wire Assembly
B12359901 71

N/A items do not appear in index.

© Copyright, Alliance Laundry Systems LLC – DO NOT COPY or TRANSMIT